smarttech.com/docfeedback/171000

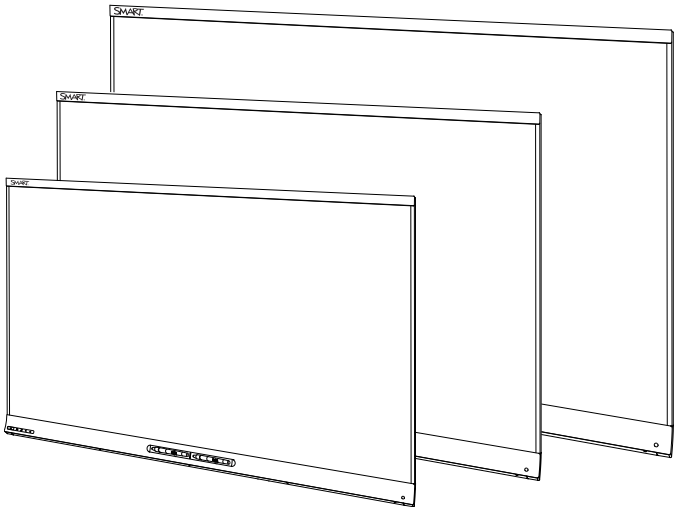

SMART kapp iQ Pro

ADMINISTRATOR'S GUIDE

FOR SMART KAPP iQ PRO™ 55, 65, 65-V2 AND 75 INTERACTIVE FLAT PANELS

Product registration

If you register your SMART product, we'll notify you of new features and software upgrades.

Register online at smarttech.com/registration.

Keep the following information available in case you need to contact SMART Support.

Serial number: _____

Date of purchase: _____

この装置は、クラスA情報技術装置です。この装置を家庭環境で使用すると電波妨害を引き起こすことがあります。この場合には使用者が適切な対策を講ずるよう要求されることがあります。

VCCI-A

Trademark notice

SMART kapp, SMART kapp iQ, SMART kapp iQ Pro, Pen ID, DViT, smarttech, the SMART logo and all SMART taglines are trademarks or registered trademarks of SMART Technologies ULC in the U.S. and/or other countries. Apple, App Store, iPhone, and iPad are trademarks of Apple Inc., registered in the U.S. and other countries. Google, Google Play, Android and Chrome are trademarks of Google Inc. The Bluetooth word mark is owned by the Bluetooth SIG, Inc. and any use of such marks by SMART Technologies ULC is under license. All other third-party product and company names may be trademarks of their respective owners.

Copyright notice

© 2016 SMART Technologies ULC. All rights reserved. No part of this publication may be reproduced, transmitted, transcribed, stored in a retrieval system or translated into any language in any form by any means without the prior written consent of SMART Technologies ULC. Information in this manual is subject to change without notice and does not represent a commitment on the part of SMART.

This product and/or use thereof is covered by one or more of the following U.S. patents:

www.smarttech.com/patents

12/2016

smarttech.com/kb/171000

Important information

WARNING

- Failure to follow the installation instructions shipped with the interactive flat panel could result in injury and product damage which may not be covered by the warranty.
- Do not open or disassemble the interactive flat panel. You risk electrical shock from the high voltage inside the casing. Opening the casing also voids the warranty.
- Do not stand (or allow children to stand) on a chair to touch the surface of the interactive flat panel. Rather, mount the product at the appropriate height.
- To reduce the risk of fire or electric shock, do not expose the interactive flat panel to rain or moisture.
- If the interactive flat panel requires replacement parts, make sure the service technician uses replacement parts specified by SMART Technologies or parts with the same characteristics as the original.
- Ensure that any cables that cross the floor to the interactive flat panel are properly bundled and marked to avoid a trip hazard.
- Do not insert objects inside the cabinet ventilation holes, because they could touch dangerous voltage points and cause electric shock, fire or product damage which may not be covered by the warranty.
- Do not place heavy objects on the power cable. Damage to the cable could cause shock, fire or product damage which may not be covered by the warranty.
- Use only extension cords and outlets that can fully accommodate the interactive flat panel's polarized plug.
- Use the power cable provided with the interactive flat panel. If a power cable is not supplied, contact your supplier. Use only power cables that match the AC voltage of the power outlet and that comply with your country's safety standards.
- If the glass is broken, do not touch the liquid crystal. To prevent injury, handle glass fragments with care when disposing of them.
- Do not move or mount the interactive flat panel by connecting rope or wire to its handles. The interactive flat panel is heavy, and failure of the rope, wire or handle could lead to injury.

- Use only VESA®-approved mounting hardware.
- Disconnect all of the interactive flat panel's power cables from the wall outlet and seek assistance from qualified service personnel if any of the following occur:
  - The power cable or plug is damaged
  - Liquid is spilled into the interactive flat panel
  - Objects fall into the interactive flat panel
  - The interactive flat panel is dropped
  - Structural damage, such as cracking, occurs
  - The interactive flat panel behaves unexpectedly when you follow operating instructions
- The pens on this product use an adhesive containing nonylphenol ethoxylate, a candidate substance of very high concern under the EU REACH Regulation (EC) 1907/2006.

تستخدم الأقلام الموجودة في هذا المنتج مادة لاصقة تحتوي على نونيلفينول إيثوكسيلات، وهي مادة مرشحة أن يكون لها خطورة كبيرة وفقًا للائحة REACH للاتحاد الأوروبي رقم (EC) 1907/2006.

Las plumas de este producto utilizan un adhesivo que contiene etoxilato de nonilfenol, una sustancia candidata de muy alto riesgo según el Reglamento REACH de la UE (CE) 1907/2006.

Pera na tomto produktu využívají lepidlo obsahující nonylfenol ethoxylát, což je dle nařízení (ES) REACH 1907/2006 látka vzbuzující mimořádné obavy.

Pennene på dette produkt anvender et klæbemiddel der indeholder nonylphenolethoxylat, et stof der er særligt problematiske under EU REACH forordningen (EF) 1907/2006.

Die Stifte dieses Produkts verwenden einen Klebstoff mit Nonylphenolethoxylat, einem Stoff der nach Artikel 59 der Verordnung (EG) Nr. 1907/2006 (REACH) auf der Liste der Stoffe mit einem beträchtlichen Risiko steht.

Οι πένες αυτού του προϊόντος χρησιμοποιούν μια κολλητική ουσία που περιέχει αιθοξυλιωμένη εννεϋλοφαινόλη, μια υποψήφια ουσία που προκαλεί πολύ μεγάλη ανησυχία σύμφωνα με τον Κανονισμό REACH της ΕΕ (ΕΚ) 1907/2006.

Los rotuladores de este producto emplean un adhesivo que contiene etoxilato de nonilfenol, una sustancia candidata de gran preocupación según la regulación REACH de la UE (CE) 1907/2006.

이 제품의 펜은 EU REACH Regulation (EC) 1907/2006에 의해 고위험성우려 후보물질로 지정된 노닐페놀 에톡시레이트가 함유된 접착제를 사용합니다.

Voor de stiften in dit product wordt gebruik gemaakt van een kleefstof met nonylfenolethoxylaat, een zeerzorgwekkende stof op dekandidaatslijst volgens de Europese REACH-richtlijn (EG) 1907/2006.

Pennene som følger med dette produktet bruker et klebestoff som inneholdernonylfenoloksetylat, et stoff det er ytret stor bekymring for iEU REACH Regulation (EC) 1907/2006.

Pióra na tym produkcie używają kleju zawierającego etoksylan nonylofenolu, substancję z listy kandydackiej wzbudzającą duże obawy na mocy unijnego Rozporządzenia REACH (WE) 1907/2006.

As canetas neste produto usam um adesivo contendo nonilfenol etoxilado, uma substância candidata que suscita elevada preocupação no âmbito do regulamento EU REACH (EC) 1907/2006.

В пишущих ручках данного изделия используется клей, содержащий оксиэтилированный нонилфенол—кандидат на включение в списки особо опасных веществ в соответствии с Регламентом ЕС относительно правил регистрации, оценки, санкционирования и ограничения использования химических веществ (REACH) 1907/2006.

Tämän tuotteen kynissä on liimaa, joka sisältää nonyylifenolietoksylaattia, joka on erityinen huolenaihe EU REACH-asetuksen (EY) 1907/2006 mukaan.

Les crayons de ce produit utilisent un adhésif contenant des éthoxylates de nonylphénol, substance extrêmement préoccupante en vertu du règlement REACH de l'UE (CE) 1907/2006.

Ezen a terméken a tollak egy nonil-fenol-etoxilátot tartalmazó ragasztót használnak. Ez az anyag az 1907/2006/EK REACH-rendelet értelmében különös aggodalomra okot adó.

Le penne di questo prodotto utilizzano un adesivo contenente etossilato di nonilfenolo, una sostanza candidata estremamente problematica ai sensi del regolamento REACH dell'UE (CE) 1907/2006.

この製品のペンには、EUのREACH規則（EC）No 1907/2006で定められている高懸念物質候補であるノニルフェノールエトキシレートを含む接着剤が使用されています。

Pisala na tem izdelku uporabljajo lepilo, ki vsebuje nonilfenol etoksilat, ki se uvršča med snovi, ki morda vzbujajo zelo veliko skrb v skladu z Uredbo EU (ES) 1907/2006 REACH.

De inkluderade pennorna för denna produkt använder ett bindemedel som innehållernonylfenoletoxylat, som är föremål för bekymmer enligt EU REACH förordning (EG) 1907/2006.

Bu üründeki kalemler, AB REACH Yönetmeliği(EC) 1907/2006 uyarınca son derece endişe uyandıran madde adayı nonilfenol etoksilat içeren bir yapıştırıcıyı kullanmaktadır.

本产品所用之墨笔采用之黏胶含有壬基酚聚氧乙烯醚（nonylphenol ethoxylate），根据欧盟REACH法规（EC）1907/2006，此化学物为极受关切化学物名单上之候选化学物之一。

本產品所用之墨筆採用之黏膠含有壬基酚聚氧乙烯醚（nonylphenol ethoxylate），根據歐盟 REACH 法規（EC）1907/2006，此化學物為極受關切化學物名單上之候選化學物之一。

CAUTION

- Before you clean the interactive flat panel's screen, shut down or disconnect the computer. Otherwise, you may scramble the desktop icons or inadvertently activate applications when you wipe the screen.
- Avoid setting up and using the interactive flat panel in an area with excessive levels of dust, humidity and smoke.
- Dust buildup on the camera windows and reflective tape will degrade touch performance. SMART recommends that you inspect the camera windows and reflective tape for buildup and clean weekly.
- Make sure an electrical socket is near the interactive flat panel and remains easily accessible during use.
- The interactive flat panel should be used only with European TN and TT power distribution systems.

  It is not suitable for older, IT-type power distribution systems found in some European countries. "This system (IT-type) is widely used isolated from earth, in some installations in France, with impedance to earth, at 230/400V, and in Norway, with voltage limiter, neutral not distributed, at 230V line-to-line." (IEC 60950:1999)

  Contact qualified personnel if you're uncertain of the type of power system available where you're installing the interactive flat panel.

- The accessory slot's maximum available power is 60 W. The slot is not a limited power source. To reduce the risk of fire, make sure that accessories connecting to the slot satisfy the fire enclosure requirements of IEC 60950-1.
- You must connect the USB cable that came with the interactive flat panel to a computer that has a USB compliant interface and that bears the USB logo. In addition, the USB source computer must be compliant with CSA/UL/EN 60950 and bear the CE mark and CSA and/or UL Mark(s) for CSA/UL 60950. This is for operating safety and to avoid damage to the interactive flat panel.

IMPORTANT

- The following are the maximum power requirements for the interactive flat panel (including the power requirements for the accessory slot):

Model	Power requirements
SMART kapp iQ Pro™ 55	90V to 240V AC, 50 Hz to 60 Hz, 134 W
SMART kapp iQ Pro 65	100V to 240V AC, 50 Hz to 60 Hz, 199 W
SMART kapp iQ Pro 65-V2	100V to 240V AC, 50 Hz to 60 Hz, 189 W
SMART kapp iQ Pro 75	100V to 240V AC, 50 Hz to 60 Hz, 315 W

- For additional requirements and other information, refer to the interactive flat panel's specifications (see *Resources for decision makers* on page 10).

Federal Communication Commission interference statement

This device complies with Part 15 of the FCC Rules. Operation is subject to the following two conditions: (1) This device may not cause harmful interference, and (2) this device must accept any interference received, including interference that may cause undesired operation.

This equipment has been tested and found to comply with the limits for a Class A digital device, pursuant to Part 15 of the FCC Rules. These limits are designed to provide reasonable protection against harmful interference in a residential installation. This equipment generates, uses and can radiate radio frequency energy and, if not installed and used in accordance with the instructions, may cause harmful interference to radio communications. However, there is no guarantee that interference will not occur in a particular installation. If this equipment does cause harmful interference to radio or television reception, which can be determined by turning the equipment off and on, the user is encouraged to try to correct the interference by one of the following measures:

- Reorient or relocate the receiving antenna.
- Increase the separation between the equipment and receiver.
- Connect the equipment into an outlet on a circuit different from that to which the receiver is connected.
- Consult the dealer or an experienced radio/TV technician for help.

FCC Caution: Any changes or modifications not expressly approved by the party responsible for compliance could void the user's authority to operate this equipment.

This transmitter must not be co-located or operating in conjunction with any other antenna or transmitter.

5.15–5.25 GHz frequency band operation is restricted to indoor use only. Outdoor operations in the 5150~5250 MHz are prohibited.

Radiation exposure statement

This equipment complies with FCC radiation exposure limits set forth for an uncontrolled environment. This equipment should be installed and operated with minimum distance 20 cm between the radiator and your body.

Note: The country code selection is for the non-U.S. model only and is not available to all U.S. models. Per FCC regulations, all Wi-Fi products marketed in U.S. must be fixed to U.S. operation channels only.

Industry Canada statement

This device complies with RSS-210 of the Industry Canada Rules. Operation is subject to the following two conditions: (1) This device may not cause harmful interference, and (2) this device must accept any interference received, including interference that may cause undesired operation.

Ce dispositif est conforme à la norme CNR-210 d'Industrie Canada applicable aux appareils radio exempts de licence. Son fonctionnement est sujet aux deux conditions suivantes: (1) le dispositif ne doit pas produire de brouillage préjudiciable, et (2) ce dispositif doit accepter tout brouillage reçu, y compris un brouillage susceptible de provoquer un fonctionnement indésirable.

Caution

(i) the device for operation in the band 5150-5250 MHz is only for indoor use to reduce the potential for harmful interference to co-channel mobile satellite systems;

(ii) the maximum antenna gain permitted for devices in the bands 5250-5350 MHz and 5470-5725 MHz shall comply with the e.i.r.p. limit; and

(iii) the maximum antenna gain permitted for devices in the band 5725-5825 MHz shall comply with the e.i.r.p. limits specified for point-to-point and non point-to-point operation as appropriate.

(iv) Users should also be advised that high-power radars are allocated as primary users (i.e., priority users) of the bands 5250-5350 MHz and 5650-5850 MHz and that these radars could cause interference and/or damage to LE-LAN devices.

Avertissement

Le guide d'utilisation des dispositifs pour réseaux locaux doit inclure des instructions précises sur les restrictions susmentionnées, notamment :

(i) les dispositifs fonctionnant dans la bande 5 150-5 250 MHz sont réservés uniquement pour une utilisation à l'intérieur afin de réduire les risques de brouillage préjudiciable aux systèmes de satellites mobiles utilisant les mêmes canaux;

(ii) le gain maximal d'antenne permis pour les dispositifs utilisant les bandes 5 250-5 350 MHz et 5 470-5 725 MHz doit se conformer à la limite de p.i.r.e.;

(iii) le gain maximal d'antenne permis (pour les dispositifs utilisant la bande 5 725-5 825 MHz) doit se conformer à la limite de p.i.r.e. spécifiée pour l'exploitation point à point et non point à point, selon le cas.

(iv) De plus, les utilisateurs devraient aussi être avisés que les utilisateurs de radars de haute puissance sont désignés utilisateurs principaux (c.-à-d., qu'ils ont la priorité) pour les bandes 5 250-5 350 MHz et 5 650-5 850 MHz et que ces radars pourraient causer du brouillage et/ou des dommages aux dispositifs LAN-EL.

Radiation exposure statement

This equipment complies with IC radiation exposure limits set forth for an uncontrolled environment. This equipment should be installed and operated with minimum distance 20 cm between the radiator and your body.

Déclaration d’exposition aux radiations

Cet équipement est conforme aux limites d’exposition aux rayonnements IC établies pour un environnement non contrôlé. Cet équipement doit être installé et utilisé avec un minimum de 20 cm de distance entre la source de rayonnement et votre corps.

Contents

Important information ..... **i**

Federal Communication Commission interference statement iv
Industry Canada statement v

Chapter 1: Welcome **1**

About this guide 1
About the interactive flat panel 2
About the SMART kapp app 8
About SMART software 9
Resources for administrators 9
Resources for others 10

Chapter 2: Mounting the interactive flat panel **11**

Before mounting the interactive flat panel 11
Mounting the interactive flat panel vertically 13
Mounting multiple interactive flat panels 13
Choosing a location 13
Choosing a height 14

Chapter 3: Connecting power and devices **15**

SMART kapp iQ Pro 55 and 65 connector panel 15
SMART kapp iQ Pro 65-V2 and 75 connector panel 16
AM 30 connector panel 18
Connecting power 19
Connecting a computer to the AM30 appliance 19
Connecting a computer to the interactive flat panel 20
Connecting external speakers 21

Chapter 4: Setting up the interactive flat panel **23**

Turning on the interactive flat panel and room computer for the first time 24
Enabling the Whiteboard library 25
Installing SMART Meeting Pro software 25
Switching between input sources 25
Displaying multiple input sources 26
Configuring the network 26

Chapter 5: Maintaining the interactive flat panel **29**

Resetting the interactive flat panel and AM30 30
Updating firmware and software 30

About the Beta Channel for system software updates 33
Connecting to a network 36
Adding or removing apps from the launcher 37
Using SMART Settings 38
Cleaning and maintaining the interactive flat panel 40
Removing and transporting the interactive flat panel 43

Chapter 6: Troubleshooting 45

Resolving issues with the SMART kapp app 46
Resolving issues with the interactive flat panel 46
Resolving issues with apps 51
Resolving Screen Share issues for Apple devices 54
Resolving Screen Share issues for Android mobile devices 57
Resolving Screen Share issues for Chrome browser or Chromebook 60
Resolving Screen Share issues for Windows computers 62
Using SMART software to resolve issues 65

Appendix A: Using the SMART kapp iQ Pro on-screen display menu 67

Appendix B: Adjusting the SMART kapp iQ Pro settings 69

About device 69
Diagnostics 70
Language 71
Country 71
Security 71
Wi-Fi 72
Advanced Wi-Fi options 73
Ethernet 73
Date & time 74
Usage Data 74
Auto Update 74
Launcher 75
SMART kapp Whiteboard 75
Screen Share [beta] 76

Appendix C: Configuring the network 77

Network ports 77

Appendix D: Supported devices for Screen Share 79

Supported Apple devices and operating systems 79
Supported Android devices and operating systems 79

Appendix E: Remotely managing the interactive flat panel 81

Connecting a computer to the interactive flat panel 81
Configuring the computer's serial interface settings 82

Power modes 83
Commands and responses 83
SMART kapp iQ Pro 55 and 65 command inventory 85
SMART kapp iQ Pro 65-V2 and 75 command inventory 91

Appendix F: Installing the AM30 appliance antenna 101

Appendix G: Hardware environmental compliance 103

Waste Electrical and Electronic Equipment (WEEE) 103
Batteries 103
More information 103

Chapter 1

Welcome

About this guide 1
About the interactive flat panel 2
Models 2
Specifications 2
Components 3
Screen 4
Cameras and reflective tape channel 4
Front control panel 5
Pens with erasers 6
Presence detection sensor 7
Speakers 7
USB receptacle 7
Accessory slot 8
About the SMART kapp app 8
About SMART software 9
Resources for administrators 9
SMART Meeting Pro software installation documentation 9
Training 9
Support center and knowledge base 10
Resources for others 10
Resources for decision makers 10
Resources for installers 10
Resources for users 10

This chapter introduces SMART kapp iQ Pro interactive flat panels, the SMART kapp app and this guide.

About this guide

This guide explains how to set up and maintain a SMART kapp iQ Pro interactive flat panel. It includes the following information:

- How to mount the interactive flat panel
- How to connect power and devices

- How to set up the interactive flat panel
- How to maintain the interactive flat panel for years of use
- How to troubleshoot issues with the interactive flat panel

In addition, this guide includes information on the interactive flat panel's remote management support and on-screen display menu.

This guide is intended for individuals who install and maintain interactive flat panels in their organizations. Other documentation and resources are available for individuals who use interactive flat panels.

About the interactive flat panel

The SMART kapp iQ Pro interactive flat panel features SMART's proprietary DViT® (Digital Vision Touch) technology on an LCD screen with e-LED backlight.

Models

Four models of SMART kapp iQ Pro interactive flat panel are available:

- SMART kapp iQ Pro 55
- SMART kapp iQ Pro 65
- SMART kapp iQ Pro 65-V2
- SMART kapp iQ Pro 75

Differences among these models are noted in this guide.

Specifications

Refer to the interactive flat panel's specifications for detailed technical information, including product dimensions and weights.

Components

The interactive flat panel consists of the following components:

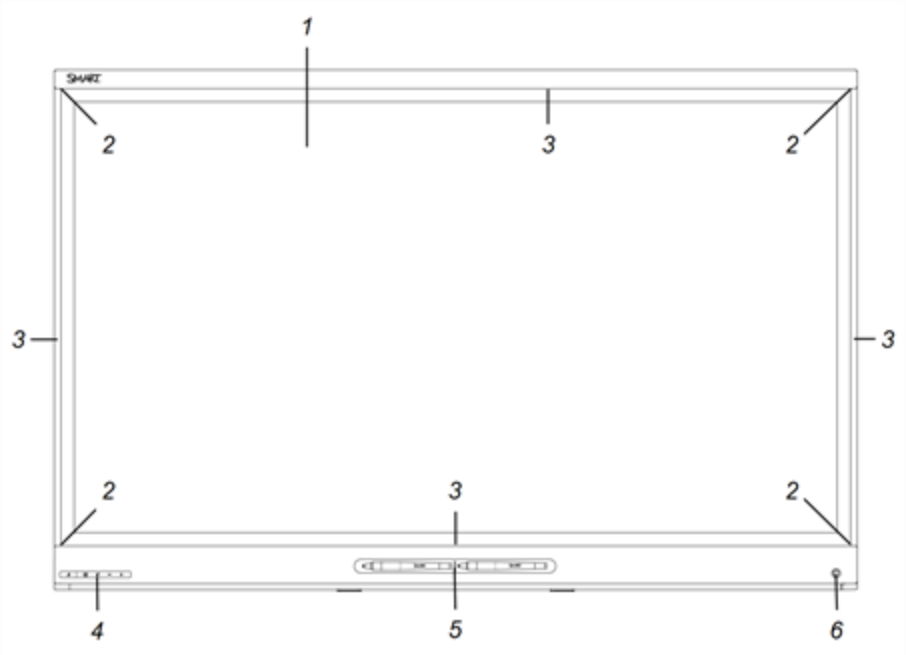

No.	Name	More information
Pictured		
1	Screen	Page 4
2	Cameras	Page 4
3	Reflective tape channel	Page 4
4	Front control panel	Page 5
5	Pen with eraser (×2)	Page 6
6	Presence detection sensor	Page 7
Not pictured		
7	Speakers	Page 7
8	Connector panel	Page 15
9	Menu control panel	See Using the SMART kapp iQ Pro on-screen display menu (support.smarttech.com/docs/hardware/kapp/kapp-iq-pro/en/installing-and-maintaining/using-the-osd-menu/default.cshtml)

No.	Name	More information
10	USB receptacle	Page 7
11	Accessory slot	Page 8

Screen

The screen sizes vary by model:

Model	Diagonal	Width	Height	Aspect ratio
SMART kapp iQ Pro 55	54 1/2" (138.4 cm)	47 5/8" (121 cm)	26 3/4" (68 cm)	16:9
SMART kapp iQ Pro 65	64 1/2" (163.9 cm)	56 1/4" (142.8 cm)	31 5/8" (80.4 cm)	16:9
SMART kapp iQ Pro 65-V2	64 1/2" (163.9 cm)	56 1/4" (142.8 cm)	31 5/8" (80.4 cm)	16:9
SMART kapp iQ Pro 75	75" (190.5 cm)	65" (165.2 cm)	38 5/8" (93 cm)	16:9

For information on cleaning the screen, see *Cleaning the screen* on page 41.

Cameras and reflective tape channel

Cameras in the corners of the screen track finger and pen positions across the display. The screen is bordered by a channel that contains reflective tape.

For information on cleaning the camera windows and reflective tape, see *Cleaning the camera windows and reflective tape* on page 41.

CAUTION

- Keep the reflective tape dry.
- Do not remove or damage the reflective tape.

IMPORTANT

- Do not attach adhesive notes or other items to the screen because they will interfere with the cameras.
- Do not place anything in the reflective tape channel because it will interfere with the cameras.

Front control panel

The front control panel contains the Standby, Input Select, Mute and volume control buttons.

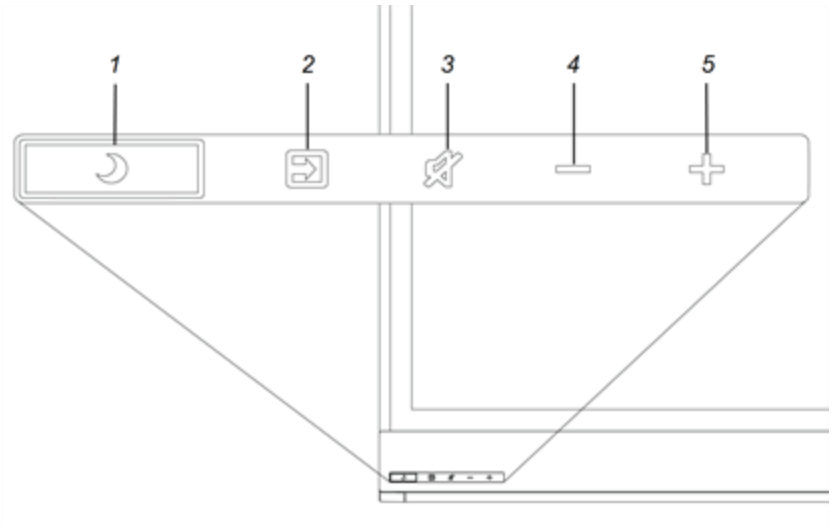

No.	Name
1	Standby button[1]
2	Input Select button[2]
3	Mute button[3]
4	Volume decrease
5	Volume increase

IMPORTANT

If there is a film over the front control panel, remove it before using the front control panel.

In normal operation, all buttons are white.

The Standby button also functions as an indicator light:

Indicator light	Status	Troubleshooting
Solid white	Normal operation	[N/A]

[1]Press and hold to reset the interactive flat panel

[2]Change the input source to OPS/HDMI for the kapp iQ experience.

[3]Press and hold to freeze and unfreeze the screen (SMART kapp iQ Pro 65-V2 and 75 interactive flat panels only)

Indicator light	Status	Troubleshooting
Off	Not receiving power	Confirm the interactive flat panel's power cable is connected to the power outlet (see page 19). Flick the power switch to the ON (I) position (see page 24).
Solid amber	DPMS (power management) mode	Press the **Standby** button ☽ to exit DPMS mode. Connect an input source.
Slowly flashing amber	Standby mode	Press the **Standby** button ☽ to exit Standby mode. If presence detection is enabled, move in range of the presence detection sensor. See Proximity (support.smarttech.com/docs/hardware/kapp/kapp-iq-pro/en/installing-and-maintaining/using-the-osd-menu/default.cshtml). If wake-to-touch is enabled, touch the screen. See Wake to Touch (support.smarttech.com/docs/hardware/kapp/kapp-iq-pro/en/installing-and-maintaining/using-the-osd-menu/default.cshtml).
Flashing amber	No USB connection from the connected computer	Verify the connections to the room computer (see page 20). Switch to the room computer's input source (see page 25).
Slowly flashing white	SMART Board service not running on the connected computer	Ensure that SMART Product Drivers is installed and that the SMART Board service is running.[4]

Pens with erasers

The interactive flat panel comes with two pens with erasers attached.

The interactive flat panel's bottom frame includes magnetic holders for the pens. Removing a pen from the holders activates it, and you can use it to draw or erase digital ink.

CAUTION

When you return the pen to the magnetic holder, make sure it's centered in its holder to keep it from falling and being damaged.

[4]This only applies when a computer is connected to the interactive flat panel's computer connectors.

Presence detection sensor

The interactive flat panel has a presence detection sensor on its bottom frame that can detect people up to 16' (5 m) away when the interactive flat panel is in Standby mode.

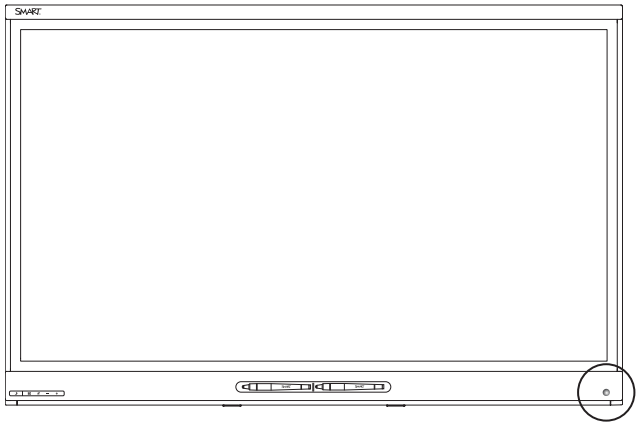

When the sensor detects people in the room, the interactive flat panel turns on. Touching the screen activates the interactive flat panel. If the room is empty for a specified period, the interactive flat panel returns to Standby mode.

NOTES

- See *Cleaning the presence detection sensor* on page 42 for more information.
- If presence detection is enabled, move in range of the presence detection sensor. See Proximity (support.smarttech.com/docs/hardware/kapp/kapp-iq-pro/en/installing-and-maintaining/using-the-osd-menu/default.cshtml).

Speakers

The interactive flat panel includes two 10 W integrated side-firing speakers.

You can connect external speakers if desired (see *Connecting external speakers* on page 21).

USB receptacle

You can connect a USB drive to update the appliance's software.

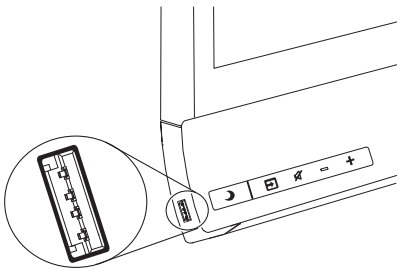

Accessory slot

Install the AM30 appliance in the accessory slot located on the back of the interactive flat panel to take advantage of SMART kapp iQ functionality.

CAUTION

The accessory slot's maximum available power is 60 W. The slot is not a limited power source. To reduce the risk of fire, make sure that accessories connecting to the slot satisfy the fire enclosure requirements of IEC 60950-1.

About the SMART kapp app

The SMART kapp app enables users to connect their mobile devices to the interactive flat panel and then do the following:

- View notes they write on the interactive flat panel on their mobile devices
- Save and export notes
- Start a session and invite others to join and collaborate

To connect Bluetooth-enabled mobile devices to the interactive flat panel, users can scan the Quick Response (QR) code on the screen. When users first connect their mobile devices, they're directed to the Apple App Store (itunes.apple.com/ca/app/smart-kapp/id860144252) or Google Play™ store (play.google.com/store/apps/details?id=com.smarttech.kapp)to download the SMART kapp app. After they download and install the app, they can use it to connect to the interactive flat panel.

NOTE

The SMART kapp app is available only if the AM30 appliance is installed in the accessory slot (see *Accessory slot* above).

About SMART software

To take full advantage of the SMART kapp iQ Pro interactive flat panel's features, install the following SMART software on computers connected to the interactive flat panel. Go to SMART Downloads (smarttech.com/en/Home+Page/Support/Browse+Support/Download+Software).

Software	Description
SMART Product Drivers	SMART Product Drivers enables connected computers to detect input from the interactive flat panel.
SMART Ink™	SMART Ink enables you to write and draw in digital ink over applications, files, folders, websites and any other open window on your computer. When you write outside the open windows on your computer, a SMART Ink Note appears, and you can write inside the note. When you open an application that has its own ink tools, you can use the application's ink tools to write in the content.
SMART Meeting Pro® software	The room edition of SMART Meeting Pro software is designed for use with the interactive flat panel in a meeting room. The personal edition is designed for use on user computers. You can write or draw on a digital whiteboard, present content by sharing your desktop and connect and use integrated conferencing software to collaborate with local or remote participants.

Resources for administrators

In addition to this guide, SMART provides a variety of other resources for administrators.

SMART Meeting Pro software installation documentation

The interactive flat panel comes with one SMART Meeting Pro software room license to install on the room computer and 25 SMART Meeting Pro software personal licenses to install on users' computers.

To install SMART Meeting Pro software, refer to the *SMART Meeting Pro software system administrator's guide* (smarttech.com/kb/170518).

Training

The SMART training website (training.smarttech.com/) includes an extensive library of training resources you can consult as you learn how to set up and maintain the interactive flat panel.

Support center and knowledge base

The Support center (support.smarttech.com) contains a library of documents, including this guide, and a knowledge base that you can search when troubleshooting issues.

Resources for others

SMART provides resources for decision makers, installers and users as well as administrators.

Resources for decision makers

Decision makers can refer to the specifications for detailed information about the interactive flat panels.

Model	Specifications
SMART kapp iQ Pro 55	smarttech.com/kb/170994
SMART kapp iQ Pro 65	smarttech.com/kb/170995
SMART kapp iQ Pro 65-V2	smarttech.com/kb/171093
SMART kapp iQ Pro 75	smarttech.com/kb/170997

Resources for installers

Installers can refer to the installation instructions included with the interactive flat panel when installing the product. PDF versions of these installation instructions are available for download.

Model	Specifications
SMART kapp iQ Pro 55 SMART kapp iQ Pro 65	smarttech.com/kb/170836
SMART kapp iQ Pro 65-V2	smarttech.com/kb/171107
SMART kapp iQ Pro 75	smarttech.com/kb/170996

Installers should also refer to *Considerations for non-standard installations* (smarttech.com/kb/171035).

Resources for users

Users can refer to the *SMART kapp iQ board user's guide* for information about using the interactive flat panel with the SMART kapp app. A PDF version of this guide is available for download from smarttech.com/kb/170812.

Chapter 2

Mounting the interactive flat panel

Before mounting the interactive flat panel 11
Mounting the interactive flat panel vertically 13
Mounting multiple interactive flat panels 13
Choosing a location 13
Choosing a height 14

Mounting the SMART kapp iQ Pro interactive flat panel requires a team of professional installers.

The following information is for installers. Installers should read this information along with the installation instructions included with the interactive flat panel before they mount the interactive flat panel.

WARNING

Improper mounting of the interactive flat panel can result in injury and product damage.

Before mounting the interactive flat panel

Remember the following before mounting the interactive flat panel:

- Review the environmental requirements in the interactive flat panel's specifications.
- Save all product packaging so that it's available if you need to transport the interactive flat panel. If the original packaging isn't available, you can purchase new packaging from your authorized SMART reseller (smarttech.com/where).

- Refer to local building codes to ensure the wall can support the weight of the interactive flat panel (specified in the following table) and mounting equipment.

Model	Weight
SMART kapp iQ Pro 55	107 lb. (48.4 kg)
SMART kapp iQ Pro 65	138 lb. (62.4 kg)
SMART kapp iQ Pro 65-V2	134 lb. (60.9 kg)
SMART kapp iQ Pro 75	185 lb. (84 kg)

- Use a standard VESA mounting plate (not included) to mount the interactive flat panel on a wall.
- Use M8 screws to fasten the wall bracket.

Screw length 20 mm + *x* mm < M8 < 45 mm + *x* mm
where *x* is the combined thickness of the wall bracket and washer

Fasten force 97.36–177.01 in-lb. (11–20 N·m)

CAUTION

Do not over-tighten the screws.

NOTE

SMART recommends M8 × 30 mm mounting screws for standard installations where the total wall mount bracket and washer thickness is less than 7 mm.

- Because the receptacles might not be easily accessible after the installers mount the interactive flat panel, consider connecting cables for power, computers and other devices while the interactive flat panel is still in its packaging (see *Chapter 3: Connecting power and devices* on page 15).
- Before turning on the interactive flat panel for the first time, clean the camera windows and reflective tape following the instructions in *Cleaning the camera windows and reflective tape* on page 41.

Mounting the interactive flat panel vertically

The interactive flat panel is designed for vertical mounting (90° relative to the floor plus or minus 5° for tolerance). SMART doesn't support mounting the interactive flat panel at other angles.

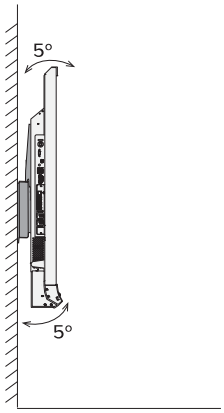

Mounting multiple interactive flat panels

SMART recommends that you mount no more than three interactive flat panels side by side.

If you mount multiple interactive flat panels side by side, install them as shown in the following diagram. This ensures the interactive flat panels' cameras don't interfere with each other.

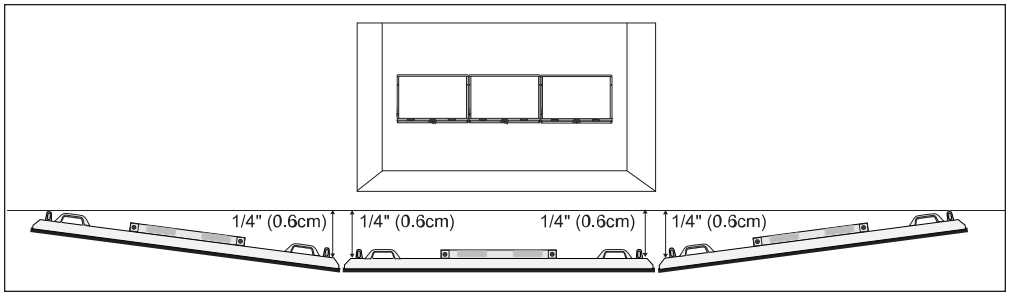

Choosing a location

Consider the following when choosing a location for the interactive flat panel:

- Do not install the interactive flat panel in a location where a door or gate could hit it.
- Do not install the interactive flat panel in an area where it will be subjected to strong vibrations or dust.
- Choose a location that's far from bright light sources, such as windows and strong overhead lighting. Infrared (IR) lighting can cause issues with the performance of the cameras and can lead to unintentional or missed touches.
- Do not install the interactive flat panel near where the mains power supply enters the building.

- Ensure adequate ventilation or provide air conditioning around the interactive flat panel so that heat can flow away from the unit and the mounting equipment.
- If you mount the interactive flat panel in a recessed area, leave at least 4" (10 cm) of space between the interactive flat panel and the recessed walls to enable ventilation and cooling.

Choosing a height

Consider the general height of the user community when you choose the height for the interactive flat panel.

SMART recommends mounting the interactive flat panel so that its top is 6' 5" (1.9 m) from the floor.

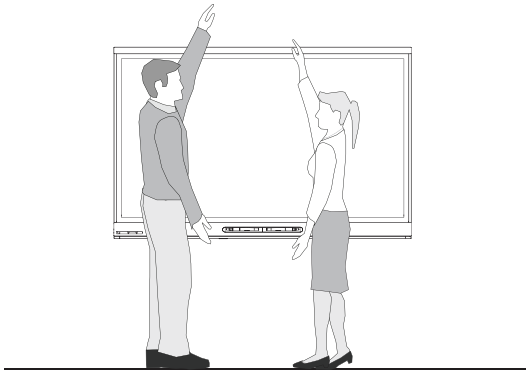

Chapter 3

Connecting power and devices

SMART kapp iQ Pro 55 and 65 connector panel 15
SMART kapp iQ Pro 65-V2 and 75 connector panel 16
AM 30 connector panel 18
Connecting power 19
Connecting a computer to the AM30 appliance 19
Connecting a computer to the interactive flat panel 20
Connecting external speakers 21

After mounting the SMART kapp iQ Pro interactive flat panel but before setting it up, you need to connect it to power and devices.

SMART kapp iQ Pro 55 and 65 connector panel

The following diagram and table present the connectors on SMART kapp iQ Pro 55 and 65 interactive flat panels:

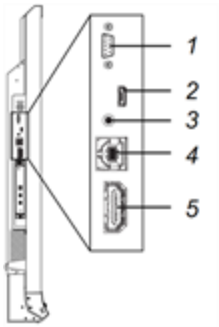

No.	Connector	Connects to	Notes
1	RS-232	Room control system	See Remotely Managing your SMART kapp iQ Pro (support.smarttech.com/docs/hardware/kapp/kapp-iq-pro/en/installing-and-maintaining/remotely-managing/default.cshtml).
2	USB Micro-A	[N/A]	This connector is a service port.
3	Stereo 3.5 mm	External speakers	See page 21.

No.	Connector	Connects to	Notes
4	USB Type-B	Room computer (touch)	See page 20.
5	HDMI®	Room computer (video)	The HDMI cable should be HDMI 1.4 compliant and no longer than 16' 5" (5 m). See page 20 for more information.

NOTE

The connectors on the AM30 appliance are for service use only.

SMART kapp iQ Pro 65-V2 and 75 connector panel

The following diagram and table present the connectors on SMART kapp iQ Pro 65-V2 and 75 interactive flat panels:

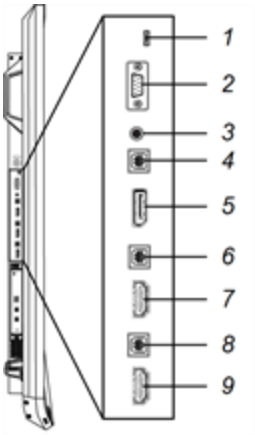

No.	Connector	Connects to	Notes
1	USB Micro-A	[N/A]	This connector is a service port.
2	RS-232	Room control system	See Remotely Managing your SMART kapp iQ Pro (support.smarttech.com/docs/hardware/kapp/kapp-iq-pro/en/installing-and-maintaining/remotely-managing/default.cshtml).
3	Stereo 3.5 mm	External speakers	See page 21.
4	USB Type-B	Guest laptop (touch)	See page 20 for more information.

No.	Connector	Connects to	Notes
5	DisplayPort	Guest laptop (video)	See page 20 for more information.
6	USB Type-B	Guest laptop (touch)	See page 20 for more information.
7	HDMI	Guest laptop (video)	The HDMI cable should be HDMI 1.4 compliant and no longer than 16' 5" (5 m). See page 20 for more information.
8	USB Type-B	Room computer (touch)	See page 20.
9	HDMI	Room computer (video)	The HDMI cable should be HDMI 1.4 compliant and no longer than 16' 5" (5 m). See page 20 for more information.

NOTE

The connectors on the AM30 appliance are for service use only.

AM 30 connector panel

NOTE

Older models of the AM30 appliance don't have all the connectors.

The following diagram and table present the connectors on the AM30:

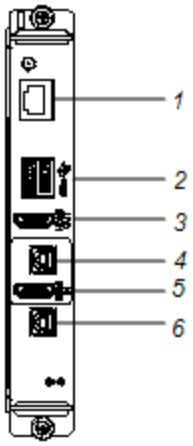

No.	Connector	Connects to	Notes
1	RJ45	Network	[N/A]
2	USB Type-A ×2	Supported peripherals	[N/A]
3	HDMI out	External monitor	HDCP encrypted HDMI The HDMI cable should be HDMI 1.4 compliant and no longer than 16' 5" (5 m).
4	USB Type-B	Computer (touch)	The USB cable should be USB 2.0 compliant and no longer than 16' 5" (5 m).
5	HDMI in	Computer (video)	The HDMI cable should be HDMI 1.4 compliant and no longer than 16' 5" (5 m).
6	USB Type-B	[N/A]	This connector is a service port.

Connecting power

Connect the supplied power cable from the AC power inlet on the bottom of the interactive flat panel to a power outlet.

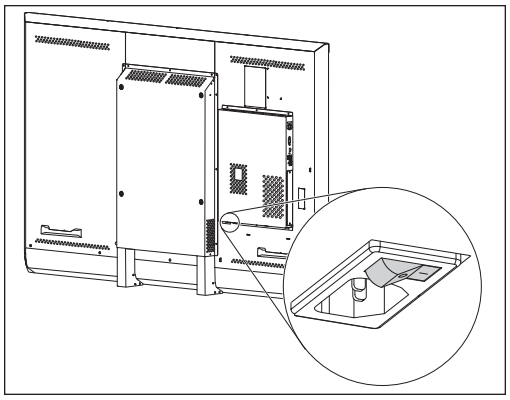

NOTE

Refer to the interactive flat panel's specifications for power requirements and power consumption information (see *Resources for decision makers* on page 10).

Connecting a computer to the AM30 appliance

NOTE

For the best experience with SMART kapp iQ Pro, connect the room computer to the AM30 appliance.

Some models of the AM30 appliance have computer connectors. If you want to use the board's touch features and use a pen to draw and write, follow these steps:

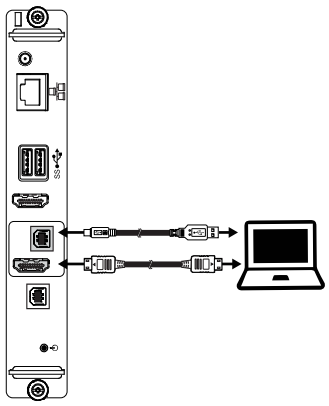

1. Connect a computer to the AM30 appliance using USB and HDMI cables.
2. Download and install SMART Product Drivers and SMART Ink on your computer. See smarttech.com/us/Support/Browse+Support/Download+Software).

After you've connected the room computer to the AM30 appliance, you can use the Input app to

switch to the room computer's desktop. See *SMART kapp iQ Pro board user's guide* (smarttech.com/kb/170812).

NOTE

When you connect a computer to the AM30 appliance, make sure the input source is OPS/HDMI. See *Switching between input sources* on page 25.

Connecting a computer to the interactive flat panel

NOTE

For the best experience with SMART kapp iQ Pro, connect the room computer to the AM30 appliance.

A SMART kapp iQ Pro interactive flat panel can have one or three computer connectors, depending on the model. Using USB and HDMI or DisplayPort cables, you can connect room computers, guest laptops or video sources (such as Blu-ray™ players) to these connectors. By installing these cables, you make use of connectors that might not be accessible when the interactive flat panel is wall-mounted. You can then run the cables across floors or behind walls to the conference table.

WARNING

Ensure that any cables that cross the floor to the interactive flat panel are properly bundled and marked to avoid a trip hazard.

If you want to use the interactive flat panel's touch features, and use a pen to draw and write, complete these steps:

- Connect a computer to the interactive flat panel's computer connectors using USB and HDMI cables.
- Download and install SMART Product Drivers and SMART Ink on your computer. See smarttech.com/us/Support/Browse+Support/Download+Software.

NOTE

Devices connected to the interactive flat panel's connectors are controlled by the front control panel. See Page 15.

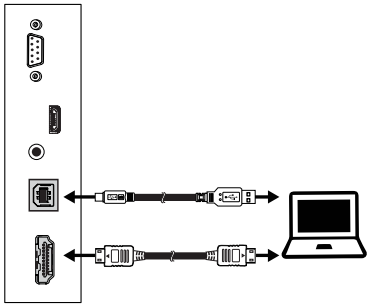

SMART kapp iQ Pro 55
SMART kapp iQ Pro 65

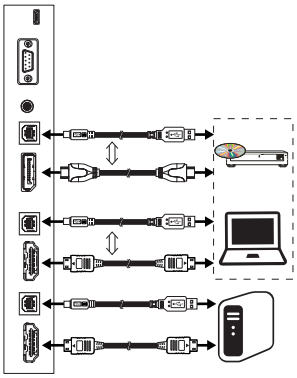

SMART kapp iQ Pro 65-V2
SMART kapp iQ Pro 75

Connecting external speakers

The interactive flat panel includes two 10 W speakers. However, you can connect external active speakers using the stereo 3.5 mm connector.

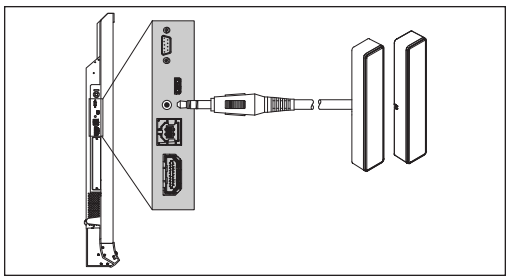

SMART kapp iQ Pro 55
SMART kapp iQ Pro 65

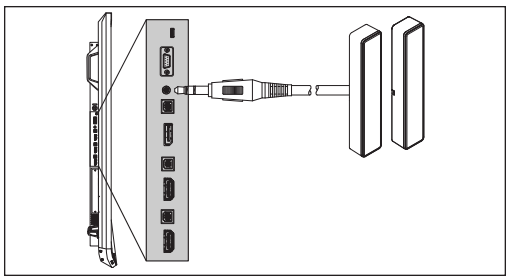

SMART kapp iQ Pro 65-V2
SMART kapp iQ Pro 75

Chapter 4

Setting up the interactive flat panel

Turning on the interactive flat panel and room computer for the first time 24
Enabling the Whiteboard library 25
Installing SMART Meeting Pro software 25
Switching between input sources 25
Displaying multiple input sources 26
Configuring the network 26
- Configuring the network for the Screen Share app 26
- Evaluating the impact of Screen Share on your network data usage 27
- Configuring the network for automatic SMART kapp iQ Pro system software updates 28
- Adding a proxy 28

After mounting the SMART kapp iQ Pro interactive flat panel (see *Chapter 2: Mounting the interactive flat panel* on page 11) and connecting power and devices (see *Chapter 3: Connecting power and devices* on page 15), you can turn on and set up the interactive flat panel.

NOTE

The setup process documented below might vary depending on which AM30 appliance is installed in your interactive flat panel.

Turning on the interactive flat panel and room computer for the first time

Turn on the interactive flat panel after mounting it and connecting power and devices.

To turn on the interactive flat panel for the first time

1. Flick the power switch beside the AC power inlet to the ON (I) position.

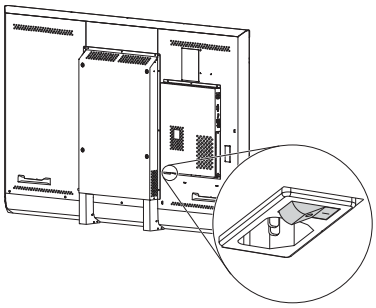

   The SMART splash screen appears.

2. Follow the on-screen instructions to calibrate the board.

   IMPORTANT

   Use the pen, rather than your finger, when calibrating the board.

3. Select your preferred language, and then press **Next**.
4. Select your country, and then press **Next**.
5. Name the board, and then press **Next**.
6. Set the date and time, and then press **Next**.
7. Optionally, select a wireless network, and then press **Next**.

   NOTE

   You don't need to select a network if you're using a wired network connection.

8. Select the list of applications that will appear in the Launcher, and then press **Next**.
9. Press **Finish**.
10. The *Welcome* screen appears.

Enabling the Whiteboard library

The interactive flat panel saves whiteboard sessions to the Library. SMART kapp iQ Pro interactive flat panels have the Library disabled. The Library must be enabled if you want to save whiteboard sessions or continue a previous sessions.

To enable the Library

1. Press the Home button on the screen to open the launcher, and then press **Settings**.
2. Go to *Applications*. Press **SMART kapp Whiteboard**.
3. Toggle *Library* to **ON**.

Installing SMART Meeting Pro software

Download and install SMART Meeting Pro software on any connected computers to take full advantage of the interactive flat panel's features.

For more information, refer to the system administrator's guide for your computer's operating system (see *SMART Meeting Pro software installation documentation* on page 9).

Switching between input sources

You can switch between input sources at any time by pressing the **Input Select** button on the front control panel:

Option	Input source
HDMI1	Room computer if the room computer is connected to the interactive flat panel OR Guest laptop if a guest laptop is connected to the interactive flat panel
HDMI2	Guest laptop (SMART kapp iQ Pro 65-V2 and 75 interactive flat panels only)
DisplayPort	Guest laptop (SMART kapp iQ Pro 65-V2 and 75 interactive flat panels only)

Option	Input source
OPS/HDMI	SMART kapp iQ functionality if the AM30 appliance is installed in the accessory slot **NOTE** Connect the computer to the AM30 appliance to use the Input app.
OPS/DisplayPort	Optional mini-computer if installed in the accessory slot (SMART kapp iQ Pro 65-V2 and 75 interactive flat panels only)

Displaying multiple input sources

You can display up to four input sources on a SMART kapp iQ Pro 65-V2 or 75 interactive flat panel using the on-screen display menu (see support.smarttech.com/docs/hardware/kapp/kapp-iq/en/installing-and-maintaining/using-the-osd-menu/default.cshtml).

If you use this feature, be aware that SMART doesn't support touch while multiple input sources are displayed on the interactive flat panel.

Configuring the network

Network administrators need to configure the network so users can use the Screen Share app, update the system software automatically through the network and to enable the interactive flat panel to set the date and time automatically. Network administrators can also add a browser proxy.

Configuring the network for the Screen Share app

NOTE

Using a 5GHz network connection may provide a better experience with the Screen Share app

Complete the following tasks on the network to allow mobile devices and computers to use AirPlay and Google Cast to use the Screen Share app:

- open the required TCP/UDP ports (see the following table)
- configure the network to allow Bonjour and mDNS (multicast)
- configure the network to allow Network Time Protocol (NTP) requests to Internet time servers

Protocol	Port Range	Feature
TCP	80	Outbound http
UDP	123	Network Time Protocol
TCP	3689	iTunes music sharing
TCP	5000	Audio streaming
TCP	5353	mDNS
UDP	5353	mDNS
TCP	7000	Picture sharing
TCP	7001	Video streaming
UDP	7010	Display mirroring
UDP	7011	Display mirroring
TCP	7100	Display mirroring
TCP	47000	Audio negotiation
TCP	49152–65535	Dynamic ports
UDP	49152–65535	Dynamic ports
TCP	49228	Google Cast
TCP	50259	Google Cast
UDP	54780	Google Cast
UDP	62572	Google Cast

Evaluating the impact of Screen Share on your network data usage

When you connect your device or computer to the board using Screen Share, the screen sharing protocol compresses the image from your device or computer. The protocol may transmit only areas of the screen that change. This can make it difficult to estimate the impact of Screen Share on a network where many users would like to screen share simultaneously.

For example, in a school where 30 teachers are using Screen Share simultaneously, 10% of teachers might be streaming video while 90% might be sharing static content with periodic updates. The network could expect to see an additional 5 MB/sec in network traffic. Use the table below to help estimate the impact of Wireless Screen share on your network.

Content being shared	Data rate transmission
Static content, minor screen movement	20 kb/sec
Static content, periodic scrolling or refresh	Spikes briefly to 500–600 kb/sec, returns to 20 kb/sec

Content being shared	Data rate transmission
Gaming or streaming video with major screen changes	700 kb/sec–1.2 MB/sec

Configuring the network for automatic SMART kapp iQ Pro system software updates

To allow automatic system software updates

- add https://ws.kappboard.com to the network's whitelist
- add http://downloads.smarttech.com to the network's whitelist

To prevent automatic system software updates

block access to https://ws.kappboard.com

Adding a proxy

To add a proxy

1. Press the Home button on the screen to open the launcher, and then press **Settings**.
2. Press **Wi-Fi**.
3. Press and hold the network to which you're adding a proxy.

   A dialog box appears.
4. Press **Modify network**.
5. Select **Show advanced options**.
6. In the *Proxy* field, select **Manual**.
7. Enter the information in the Proxy hostname, Proxy port and Bypass proxy fields.
8. Press **Save**.

Chapter 5

Maintaining the interactive flat panel

Resetting the interactive flat panel and AM30 30
Updating firmware and software 30
Updating firmware 30
Updating SMART kapp iQ system software 31
Automatic SMART kapp iQ system software updates 31
Manual updates for SMART kapp iQ system software 32
Updating SMART Meeting Pro software 32
About the Beta Channel for system software updates 33
Getting support and sending feedback 33
Tips for using the Beta channel 33
To switch to the Beta channel 34
To switch to the Stable channel 34
Connecting to a network 36
Connecting to a Wi-Fi network 36
Connecting to a wired Ethernet network 36
Adding a proxy 37
Adding or removing apps from the launcher 37
Adding or removing apps from the launcher 37
Using SMART Settings 38
Opening SMART Settings 38
Orienting the interactive flat panel 38
Calibrating the interactive flat panel 39
Cleaning and maintaining the interactive flat panel 40
Checking the interactive flat panel installation 40
Cleaning the screen 41
Cleaning the camera windows and reflective tape 41
Cleaning the presence detection sensor 42
Maintaining ventilation 42
Preventing condensation 43
Maintaining pens 43
Removing and transporting the interactive flat panel 43
Removing the interactive flat panel 43

Transporting the interactive flat panel 44

This chapter describes common maintenance procedures for the interactive flat panel.

Resetting the interactive flat panel and AM30

You can reset the interactive flat panel and AM30 (if installed) using the front control panel.

To reset the interactive flat panel and AM30

Press and hold the **Standby** button until the screen turns black.

The interactive flat panel and AM30 reset.

Updating firmware and software

SMART periodically releases updates to the SMART kapp iQ Pro interactive flat panel's firmware as well as to SMART software. Install these updates for the best experience.

Updating firmware

The interactive flat panel uses firmware on its processor. Updates to SMART software could include a firmware update in the form of a downloaded firmware executable file. When the interactive flat panel detects this executable file, you're prompted to run the file to update the firmware.

CAUTION

- Only a system administrator should update interactive flat panel firmware.
- Only one interactive flat panel can be connected to the computer during the firmware update.
- Do not disconnect the interactive flat panel from your computer during the firmware update.
- Do not touch the interactive flat panel screen or input button during the firmware update.
- Do not turn off your computer or the interactive flat panel during the firmware update.

To update firmware

1. Make sure the interactive flat panel is connected to a computer on which you've downloaded the firmware update.
2. Browse to and start the firmware updater at the following location:

Operating system	Location
Windows (32-bit)	**C:\Program Files\SMART Technologies\SMART Product Drivers\SMARTFirmwareUpdater.exe**
Windows (64-bit)	**C:\Program Files (x86)\SMART Technologies\SMART Product Drivers\SMARTFirmwareUpdater.exe**

3. Follow the on-screen instructions using the computer's mouse and keyboard. Don't touch the interactive flat panel screen.
4. Select the check box for the SMART product you want to update, and then click **Next**.

   A progress bar appears.
5. When the installation is complete, calibrate the interactive flat panel (see *Calibrating the interactive flat panel* on page 39).

Updating SMART kapp iQ system software

Automatic SMART kapp iQ system software updates
When the SMART kapp iQ interactive flat panel is connected to the Internet, it updates its system software automatically. When an update to the SMART kapp iQ system software is available, the interactive flat panel downloads the update in the background then waits for four hours of inactivity. When that happens, the interactive flat panel displays a two-minute countdown before beginning the update. The countdown can be interrupted at any time. When the countdown is complete, the update begins. The interactive flat panel shows a blank screen for four minutes. When the update is complete, the interactive flat panel displays the Whiteboard and any content that was on Whiteboard before the update.

To allow automatic system software updates

- add https://ws.kappboard.com to the network's whitelist
- add http://downloads.smarttech.com to the network's whitelist

To prevent automatic system software updates

block access to https://ws.kappboard.com

To apply an automatic system software update manually

If the interactive flat panel has downloaded the system software update but hasn't applied the update, you can start the update process manually from Settings.

1. Press the Home button on the screen.
2. Press **Settings**.

   The *Settings* window appears.
3. Scroll to **Auto Update**.
4. Under *Check for Updates Now*, press **Apply Update Now**.

Manual updates for SMART kapp iQ system software
You can download SMART kapp iQ system software updates at smarttech.com/downloads and update your interactive flat panel using a USB drive.

Updating SMART Meeting Pro software

SMART Product Update (SPU) is included in SMART Meeting Pro software. SPU periodically checks for updates to SMART Meeting Pro software and other SMART software posted on the SMART website. You can configure SPU to prompt users to install updates or to install updates automatically.

For more information, refer to the *SMART Meeting Pro software system administrator's guide* (see *SMART Meeting Pro software installation documentation* on page 9).

NOTES

- If you didn't install SPU, you can download updates to SMART Meeting Pro software and other SMART software from smarttech.com/downloads.
- Even if you installed SPU, you should visit smarttech.com from time to time to learn about major new releases of SMART Meeting Pro software and other SMART software.

About the Beta Channel for system software updates

The Beta channel is meant for advanced users who are comfortable using pre-release software. System software releases in the Beta channel contain new features that are still in development. Sign up to receive Beta channel announcements at smarttech.com/SMARTBetaProgram.

IMPORTANT

- You may encounter bugs or other unexpected behavior in pre-release software.
- Features previewed in the Beta channel may never appear in a Stable channel release.
- There may be frequent updates to the interactive flat panel's system software.
- The user interface may change significantly as features develop.
- If you switch to the Beta channel and want to return to the Stable channel, you must perform a factory reset that erases all of the interactive flat panel's settings.
- SMART Support will not be able to help you resolve problems you may encounter in Beta channel releases.

Getting support and sending feedback

SMART Support will not be able to help you resolve problems you may encounter in Beta channel releases.

SMART appreciates your willingness to use Beta channel releases and values all types of feedback

- Report issues with Beta channel releases at smarttech.uservoice.com.
- Provide feedback to SMART about new features at smarttech.uservoice.com.
- Suggest new features to SMART at smarttech.uservoice.com.

Tips for using the Beta channel

Before moving to the Beta channel, back up important Whiteboard content using the SMART kapp app. See Saving snapshots in the app (support.smarttech.com/docs/hardware/kapp/kapp-iq/en/using-the-app/saving-and-working-with-snapshots.cshtml).

To switch to the Beta channel

WARNING

- Moving to the Beta channel may cause the interactive flat panel to behave unexpectedly. Features previewed in the Beta channel may not appear in the Stable channel.
- Returning to the Stable channel requires a factory reset. A factory reset erases all settings and returns them to default values.

1. Open the launcher.

   The launcher appears.

2. Press **Settings** .

   The *Capture Board Settings* window appears.

3. Press **Auto Update**.
4. Press **Update Channel**, and then select **Beta Channel**.

   A dialog box appears asking you to confirm the switch to the beta system software releases.

5. The interactive flat panel checks for a Beta system software update.

To switch to the Stable channel

WARNING

Moving to the Stable channel requires a factory reset. A factory reset erases all settings and returns them to the default values.

1. Open the launcher.

   The launcher appears.

2. Press **Settings** .

   The *Capture Board Settings* window appears.

3. Press **Auto Update**.

4. Press **Update Channel**, and then select **Stable Channel**.

   A dialog box appears asking you to confirm the switch to the Stable channel system software releases.

5. The interactive flat panel checks for a Stable channel system software update.
6. Press **Ready to apply update**.

Connecting to a network

The SMART kapp iQ Pro interactive flat panel can connect to a network using either a Wi-Fi or wired connection.

Connecting to a Wi-Fi network

To connect to a Wi-Fi network

1. If an Ethernet cable is connected to the AM30 appliance, disconnect it.
2. Press the Home button on the screen to open the launcher.
3. Press **Settings** in the launcher.
4. Press **Wi-Fi**.

   NOTE

   Ensure the toggle for Wi-Fi is **On**.

5. Select a wireless network.
6. Enter the Wi-Fi password in the *Password* field, and then press **Connect**.

   TIP

   Use the crosshairs to move the keyboard.

Connecting to a wired Ethernet network

To connect to a wired Ethernet network

NOTE

The network must provide network settings via DHCP.

Connect an Ethernet cable to the RJ45 receptacle on the AM30 appliance.

See *AM 30 connector panel* on page 18 for more information about connecting to a wired network.

Adding a proxy

To add a proxy

1. Press the Home button on the screen to open the launcher, and then press **Settings**.
2. Press **Wi-Fi**.
3. Press and hold the network to which you're adding a proxy.

   A dialog box appears.
4. Press **Modify network**.
5. Select **Show advanced options**.
6. In the *Proxy* field, select **Manual**.
7. Enter the information in the Proxy hostname, Proxy port and Bypass proxy fields.
8. Press **Save**.

Adding or removing apps from the launcher

You can add or remove apps from the launcher.

Adding or removing apps from the launcher

To add or remove apps from the launcher

1. Press the Home button on the screen.

   The launcher appears.
2. Press **Settings**.

   The *Capture Board Settings* window appears.
3. Select **Launcher**.
4. Select the checkboxes for apps you want.

   OR

   Clear the checkboxes for apps you want to remove.
5. To exit the Capture Board Settings, open the launcher and select an app.

Using SMART Settings

Use SMART Settings to configure the SMART software on computers connected to the SMART kapp iQ Pro interactive flat panel.

Opening SMART Settings

To open SMART Settings on Windows 7 operating system

Select **Start** > **All Programs** > **SMART Technologies** > **SMART Tools** > **SMART Settings**.

SMART Settings appears.

To open SMART Settings on Windows 8 operating system

1. Open the *Apps* screen.
2. Select **SMART Technologies** > **SMART Settings**.

   SMART Settings appears.

To open SMART Settings on Windows 10 operating system

1. Select **Start** > **All apps**.
2. Select **SMART Technologies** > **SMART Settings**.

   SMART Settings appears.

Orienting the interactive flat panel

If the interactive flat panel is connected to a computer and the pointer appears a distance from the actual contact when you touch the screen, orient the interactive flat panel.

NOTE

You can use your finger or a pen to orient the interactive flat panel.

To orient the interactive flat panel when connected to a computer

1. Open SMART Settings (see *Opening SMART Settings* above).
2. Press **Orient**.

3. Press the red targets as they appear. Hold your finger or the tip of the pen at the center of each target, and then lift the pen or finger. When you lift the pen or finger, the target moves to the next orientation point.

   IMPORTANT

   Hold the pen at a right angle to the screen.

4. Continue until you've pressed all the targets.

   The orientation window closes.

5. If orientation doesn't correct inaccurate touch, calibrate the interactive flat panel (see *Calibrating the interactive flat panel* below).

Calibrating the interactive flat panel

Digital cameras in the corners of the interactive flat panel track the position of the pens, eraser and your finger on the interactive surface, and then send the information to the SMART software on connected computers, which interprets this information as mouse clicks, digital ink or an eraser in the appropriate location. Calibration determines the position and angles of the cameras to accurately identify the location of touches on the interactive flat panel.

IMPORTANT

If an error message appears while you calibrate the interactive flat panel, contact SMART Support (smarttech.com/contactsupport).

To calibrate the interactive flat panel when connected to a computer

1. Open SMART Settings (see *Opening SMART Settings* on the previous page).
2. Press **SMART Hardware Settings**.
3. If more than one SMART product is connected to your computer, select the interactive flat panel.
4. Select **Advanced Settings** from the drop-down list.
5. Press **Calibrate**, and then follow the on-screen instructions.

   The calibration screen appears. This can take a few moments.

6. Press the red target with the tip of a pen. Hold the tip at the center of the target until the target turns green, and then lift the pen.

   The target moves to the next location.

   NOTE

   You can calibrate a target again by pressing the LEFT ARROW key on your keyboard.

7. Continue pressing targets until the second calibration screen and a grid appears.

   An example appears briefly to demonstrate how to draw across the screen to calibrate the interactive surface.

8. Use a pen to draw a spiral horizontally across the grid. As you draw, the ink is blue. As you complete each square, the square becomes green.

9. When all the squares are green, a progress bar appears.

   When the progress bar is full, the interactive flat panel displays the message *Calibration successful*.

   IMPORTANT

   Wait until the calibration screen indicates that the interactive flat panel is operating correctly before proceeding.

10. Orient the interactive flat panel (see *Orienting the interactive flat panel* on page 38).

Cleaning and maintaining the interactive flat panel

With proper cleaning and maintenance, the SMART kapp iQ Pro interactive flat panel will provide years of use.

Checking the interactive flat panel installation

Inspect the interactive flat panel installation frequently to ensure that it remains securely installed.

- Check the mounting location for signs of damage or weakness that can occur over time.
- Check for loose screws, gaps, distortions or other issues that could occur with the mounting hardware.

If you find an issue, contact a professional installer.

Cleaning the screen

Follow these instructions to clean the interactive flat panel screen without damaging its anti-glare coating or other product components.

CAUTION

- Do not use permanent or dry-erase markers on the screen. If dry-erase markers are used on the screen, remove the ink as soon as possible with a lint-free, non-abrasive cloth.
- Do not rub the screen with a dense or rough material.
- Do not apply pressure to the screen.
- Do not use cleaning solution or glass cleaner on the interactive flat panel screen, because they can deteriorate or discolor the screen.
- Avoid touching the reflective tape between the screen and the frame, and ensure that this strip stays dry. Damage to this strip affects touch interactivity.

To clean the screen

1. Turn off any connected computers.
2. Press the **Standby** button on the front control panel twice.
3. Turn the interactive flat panel off by flicking the power switch beside the AC power inlet.
4. Wipe the screen with a lint-free, non-abrasive cloth.

Cleaning the camera windows and reflective tape

The interactive flat panel's DViT technology uses four cameras in the corners of the frame and the reflective material between the screen and the frame. Dust buildup on the camera windows or reflective tape can impair touch performance.

Inspect these areas regularly for dust, and clean them if any obvious buildup has occurred.

CAUTION

- Dust buildup on the camera windows and reflective tape will degrade touch performance. SMART recommends that you inspect the camera windows and reflective tape for buildup and clean weekly.
- Do not use compressed air to clean the camera windows or borders.
- Do not use water, chemicals or cleaning agents.

- Applying too much pressure when cleaning the tape or cameras can damage the tape and cause performance issues or errors.

To clean the camera windows and reflective tape

1. Using a clean lint-free cloth, gently wipe the camera windows in the top corners and the reflective tape along the top of the interactive flat panel screen.
2. Gently wipe the reflective tape along the sides of the interactive flat panel screen.
3. Gently wipe the camera windows in the bottom corners and the reflective strip across the bottom of the interactive flat panel screen.

Cleaning the presence detection sensor

The interactive flat panel has a presence detection sensor on its bottom frame.

Inspect the sensor regularly for dust and gently wipe it using a clean lint-free cloth if buildup has occurred.

CAUTION

Do not use compressed air, water, chemical agents or cleaning agents to clean the sensor.

Maintaining ventilation

The interactive flat panel requires proper ventilation. Dust buildup in the ventilation holes compromises cooling and can lead to product failure.

- Clean accessible ventilation holes monthly with a dry cloth.
- Use a vacuum cleaner with a narrow hose end fitting to clear the back ventilation holes regularly. You might have to remove the interactive flat panel from the wall. For more information on removing the interactive flat panel, see *Removing and transporting the interactive flat panel* on the facing page.

CAUTION

Avoid setting up or using the interactive flat panel in an area with excessive levels of dust, humidity or smoke.

Preventing condensation

The interactive flat panel screen contains layers of glass that can collect condensation, especially in the following conditions:

- Temperature extremes with high humidity
- Rapid changes in humidity, which can occur when you operate the product near water (such as a pool, kettle or air conditioner ventilator)
- Direct exposure to sunlight

To evaporate condensation from the interactive flat panel

1. Remove the humidity source from the interactive flat panel, if possible.
2. Turn off the interactive flat panel.
3. Remove any moisture from the interactive flat panel with a smooth, dry cloth.
4. Leave the interactive flat panel turned off for 48 hours.

Maintaining pens

To prevent damage to the interactive flat panel's anti-glare coating, replace a pen if its nib becomes worn. You can purchase replacement pens from the Store for SMART Parts (see smarttech.com/Support/PartsStore).

Removing and transporting the interactive flat panel

On occasion, you might need to remove the SMART kapp iQ Pro interactive flat panel from its current location and transport it to another location.

Removing the interactive flat panel

To remove the interactive flat panel safely, use two or more professional installers.

WARNING

- Do not attempt to move the interactive flat panel by yourself. The interactive flat panel is very heavy.
- Do not move the interactive flat panel by connecting a rope or wire to the handles on the back. The interactive flat panel can fall and cause injury and product damage.

IMPORTANT

Follow the instructions included with the floor stand or mounting hardware.

To remove the interactive flat panel

1. Turn off any connected computers.
2. Press the **Standby** button on the interactive flat panel's front control panel twice.
3. Turn off the interactive flat panel by flicking the power switch beside the AC power inlet.
4. Remove all accessible cables and connectors.
5. Remove any modules from the accessory slot.
6. Lift the interactive flat panel from its mounting location.

   WARNING

   Do not place the interactive flat panel on a sloping or unstable cart, stand or table, because the interactive flat panel could fall, resulting in injury and severe product damage.

   CAUTION

   Do not leave the interactive flat panel face up, face down or upside down for an extended period, because it could cause permanent damage to the screen.

7. Remove the mounting brackets.

Transporting the interactive flat panel

Save your original packaging so that you can repack the interactive flat panel with as much of the original packaging as possible. This packaging was designed to provide the best possible protection against shock and vibration. If the original packaging isn't available, you can purchase the same packaging directly from your authorized SMART reseller (smarttech.com/where).

CAUTION

Transport the interactive flat panel only in original or replaced packaging. Transporting the interactive flat panel without correct packaging can lead to product damage and voids the warranty.

Chapter 6

Troubleshooting

Resolving issues with the SMART kapp app 46
Resolving issues with the interactive flat panel 46
- Using the indicator light to resolve common issues 46
- Resolving presence detection issues 46
- Resolving image issues 48
- Resolving touch issues 48
- Resolving connected computer issues 49
- Locating the interactive flat panel serial number 50
- Locating the AM30 appliance serial number 51

Resolving issues with apps 51
- Resolving Browser issues 51
- Resolving Input issues 51
- Resolving Screen Share issues 52

Resolving Screen Share issues for Apple devices 54
- What is Screen Share? 54
- How do I share content from my iPhone, iPad or Mac computer? 54
- Why can't I find my SMART kapp iQ Pro interactive flat panel's name in the list of devices? 54
- Why am I experiencing performance issues? 55
- I'm experiencing other issues 55
- I'd like to give feedback 56
- Supported Apple devices and operating systems 56

Resolving Screen Share issues for Android mobile devices 57
- What is Screen Sharing? 57
- How do I share content from my Android mobile device? 57
- Why can't I find my SMART kapp iQ Pro interactive flat panel's name in the list of devices? 57
- Why am I experiencing performance issues? 58
- I'm experiencing other issues 58
- I'd like to give feedback 59
- Supported Android devices and operating systems 59

Resolving Screen Share issues for Chrome browser or Chromebook 60
- What is Screen Sharing? 60
- How do I share content using the Chrome browser or Chromebook? 60
- Why can't I find my SMART kapp iQ Pro interactive flat panel's name in the list of devices? 60
- Why am I experiencing performance issues? 61

I'm experiencing other issues 61
I'd like to give feedback 62
Resolving Screen Share issues for Windows computers 62
What is Screen Sharing? 62
How do I share content from my Windows computer? 62
Why can't I find my SMART kapp iQ Pro interactive flat panel's name in the list of devices? 63
Why am I experiencing performance issues? 64
I'm experiencing other issues 64
I'd like to give feedback 65
Using SMART software to resolve issues 65

This chapter helps you solve issues that can occur with the SMART kapp app and the interactive flat panel.

Resolving issues with the SMART kapp app

To resolve issues with the SMART kapp app, refer to the *SMART kapp iQ board user's guide* (see *Resources for users* on page 10).

Resolving issues with the interactive flat panel

To resolve issues with the SMART kapp iQ Pro interactive flat panel, review the following information. If the issues persist or aren't covered in the following information, contact SMART Support (smarttech.com/contactsupport).

Using the indicator light to resolve common issues

The Standby button on the front control panel also functions as an indicator light. You can use the indicator light to resolve common issues with the interactive flat panel. For more information, see *Front control panel* on page 5.

Resolving presence detection issues

Use the following table to resolve presence detection issues:

Symptom	Cause	Solution
The interactive flat panel isn't turning on.	Presence detection isn't enabled.	Enable presence detection. See Proximity (support.smarttech.com/docs/hardware/kapp/kapp-iq-pro/en/installing-and-maintaining/using-the-osd-menu/default.cshtml).

Symptom	Cause	Solution
	There isn't enough difference between the room temperature and human body temperature.	Reduce the room temperature.
	You aren't within 16' (5 m) of the interactive flat panel.	Move closer to the interactive flat panel or make bigger motions.
	There is glass, acrylic or similar material between you and the interactive flat panel.	Remove the material.
The interactive flat panel isn't turning off when people leave the room.	Presence detection isn't enabled.	Enable presence detection. See Proximity (support.smarttech.com/docs/hardware/kapp/kapp-iq-pro/en/installing-and-maintaining/using-the-osd-menu/default.cshtml).
	The time before the interactive flat panel automatically turns off is too long.	Reduce the time before the interactive flat panel automatically turns off. See Auto Power Off in Setup menu options (support.smarttech.com/docs/hardware/kapp/kapp-iq-pro/en/installing-and-maintaining/using-the-osd-menu/default.cshtml).
The interactive flat panel is turning on after it has been turned off.	The re-enable time is too short to allow you to exit the room before the sensor starts detecting motion again.	Increase the re-enable time. See Re-enable Time in Setup menu options (see support.smarttech.com/docs/hardware/kapp/kapp-iq-pro/en/installing-and-maintaining/using-the-osd-menu/default.cshtml).
	Sunlight is hitting the interactive flat panel.	Close any blinds or shades.
	There is glass, acrylic or similar material between you and the interactive flat panel.	Remove the material.
The interactive flat panel is turning on when people aren't present.	There's a sudden temperature change in the room (for example, humidifier emission, air conditioning or heating system).	Remove the source of major temperature fluctuation.
	Sunlight is hitting the interactive flat panel.	Close any blinds or shades.
The interactive flat panel is turning off when people are present.	Over time, presence detection averages the room temperature so people's body temperature becomes part of the ambient temperature.	Increase the time before the interactive flat panel automatically turns off. See Auto Power Off in the Setup menu options(support.smarttech.com/docs/hardware/kapp/kapp-iq-pro/en/installing-and-maintaining/using-the-osd-menu/default.cshtml).

Resolving image issues

Use the following table to resolve image issues:

Symptom	Cause	Solution
The image is too light, too dark or has poor image quality.	The interactive flat panel's picture settings might be incorrect.	Adjust the Picture options. See Picture menu options (support.smarttech.com/docs/hardware/kapp/kapp-iq-pro/en/installing-and-maintaining/using-the-osd-menu/default.cshtml).
There is a persistent image on the screen.	You or another user pressed and held the **Mute** button on the front control panel of the SMART kapp iQ Pro 65-V2 or 75 interactive flat panel, causing the screen to freeze.	Unfreeze the screen by doing one of the following: • Press and hold the **Mute** button. • Change input sources. • Disconnect the currently selected input source. • Exit Standby mode.
	An image was displayed for too long.	Turn off the interactive flat panel and leave it turned off for as long as the image was on the screen. Set up screen savers on any connected computers to prevent persistent images.
There are other image issues.	[N/A]	Return all settings to their default values. See Factory Reset in the Setup menu options (support.smarttech.com/docs/hardware/kapp/kapp-iq-pro/en/installing-and-maintaining/using-the-osd-menu/default.cshtml).

Resolving touch issues

Use the following table to resolve touch issues:

Symptom	Cause	Solution
When you touch the screen, the pointer appears in the wrong place.	You aren't touching the screen at a right angle.	See *Touching and drawing on your SMART Board interactive whiteboard is inaccurate* (kb.smarttech.com/?q=13976).
	The interactive flat panel isn't oriented.	Orient the interactive flat panel (see page 38).
An area of the screen doesn't respond to touch, or when you draw digital ink, the lines are broken.	Something is blocking the cameras.	Ensure nothing is taped to the screen.
	Something is in the reflective tape channel.	Remove items from the reflective tape channel.
	Your finger or pen is skipping as you draw. This is most common on the upstroke.	Use consistent pressure while drawing digital ink.
	Bright lights are interfering with the cameras.	Close blinds or shades or dim all halogen lights and LEDs.

Symptom	Cause	Solution
	The cameras require calibration, possibly because of a temperature change in the room.	Calibrate the interactive flat panel (see page 39).
	If you're sharing content from your computer or mobile device to the board using Wireless Screen Share, you're unable to ineract with the screen using your fingers or pens.	
You can interact with screen elements by touching them, but you can't write or draw using the pens.	The cameras require calibration, possibly because of a temperature change in the room.	Calibrate the interactive flat panel (see page 39).

Resolving connected computer issues

Use the following table to resolve connected computer issues:

Symptom	Cause	Solution
The connected computer's display is too large, too small or doesn't completely fill the screen.	The connected computer's video resolution settings don't match the interactive flat panel's native resolution.	Set the computer's video resolution to 3840 × 2160 at 30 Hz. (If the connected computer can't support this resolution, consider 1920 × 1080 at 60 Hz as an alternative.) The AM30 appliance only supports a resolution of 1920 × 1080 at 60 Hz.
The connected computer's screen resolution is correct, but the image is surrounded by black bars.	The connected computer's video card is underscanning the image.	Turn off or adjust the overscan/underscan feature in the video card driver software until the image fits the screen resolution. Refer to the computer's video card Help for more information. Select the 4K UHD option from the video card driver's advanced menu (if available).
	The video cable is of poor quality.	Replace the video cable with a better quality video cable.
	You're using two connected video cables.	Replace the two cables with one longer cable. OR Move the computer so that it's within a single cable length of the interactive flat panel.
The connected computer's display is unstable or unfocused.	The video connection is loose.	Secure the video cable to both your computer and the interactive flat panel.
	The video cable is of poor quality.	Replace the video cable with a better quality video cable.
	You're using two connected video cables.	Replace the two cables with one longer cable. OR Move the computer so that it's within a single cable length of the interactive flat panel.

Symptom	Cause	Solution
	The connected computer's video display card is defective.	Connect a different computer to the interactive flat panel. If this improves the image quality, consider replacing the video card in the original computer.
Touch interactivity is slow.	The connected computer is running too many applications.	Close some open applications.
	The connected computer doesn't meet SMART requirements.	Upgrade the computer or replace it with another computer that meets system requirements.
	You haven't used a USB 2.0 cable to connect the interactive flat panel to the computer.	Use a USB 2.0 cable and ensure it's connected to the correct USB receptacle (see page 20).
There's no sound when you play an audio file.	The connected computer's playback device isn't set correctly.	Ensure the connected computer's playback device is set as the interactive flat panel (see the connected computer's documentation).
	The SMART kapp iQ Pro 55 or 65 interactive flat panel's audio input isn't set correctly.	Ensure the board's audio input is set as the computer's audio connector. See Audio Input in Sound menu options (support.smarttech.com/docs/hardware/kapp/kapp-iq-pro/en/installing-and-maintaining/using-the-osd-menu/default.cshtml).
	The connected computer is muted.	Turn off the mute setting.
	The connected computer's volume is too low.	Turn up the volume on the computer.
	The interactive flat panel is muted.	Turn off the mute setting using the front control panel.
	The interactive flat panel's volume is too low.	Turn up the volume using the front control panel.

Locating the interactive flat panel serial number

If you need to contact SMART Support, you will need to provide SMART Support with the interactive flat panel serial number. The serial number is located in three places:

- See Using the SMART kapp iQ on-screen display menu (support.smarttech.com/docs/hardware/kapp/kapp-iq-pro/en/installing-and-maintaining/using-the-osd-menu/default.cshtml).
- Underneath the bottom frame
- On the back of the interactive flat panel

Locating the AM30 appliance serial number

If you need to contact SMART Support, you will need to provide SMART Support with the AM30 appliance serial number. The serial number is located in two places:

- The SMART kapp iQ Pro settings menu (see *Serial number* on page 70)
- On the AM30 appliance after it's been removed from the interactive flat panel

Resolving issues with apps

To resolve issues with the launcher apps, review the following information. If the issues persist or aren't covered in the following information, contact SMART Support (smarttech.com/contactsupport).

Resolving Browser issues

- Make sure the interactive flat panel is connected to a network with Internet access. See *Connecting to a network* on page 36 for more information.
- If the Browser can't visit secure (https) websites, ensure the board's date and time are correct. See Adjusting the SMART kapp iQ Pro settings in the *SMART kapp iQ Pro administrator's guide* (smarttech.com/kb/171000) for more information.
- Contact your IT admin.

Resolving Input issues

- Make sure your computer or mobile device is connected to the AM30 appliance connector panel and not the interactive flat panel's connector panel.
- If your computer or mobile device is connected to the HDMI in and USB receptacles on the AM30 appliance, ensure the input source is OPS/HDMI (see *Switching between input sources* on page 25).
- If the interactive flat panel's input source is OPS/HDMI, ensure your computer or mobile device is connected to the AM30 appliance (see *AM 30 connector panel* on page 18).
- If you see a black screen or instructions to connect to the interactive flat panel, the video signal from your computer or mobile device might be HDCP protected. Connect your computer or mobile device to the interactive flat panel's connector panel (see *AM 30 connector panel* on page 18).

- The computer or mobile device's video resolution settings and refresh rates aren't supported by the AM30 appliance. The AM30 appliance supports the following resolutions and refresh rates:
  - 1920 × 1080 at 60 Hz
  - 1600 × 900 at 60 Hz
  - 1280 × 720 at 60 Hz
- If touch is not behaving as expected, ensure SMART Product Drivers 12.3 or later is installed on your computer. See smarttech.com/en/Home+Page/Support/Browse+Support/Download+Software.
- If touch is not behaving as expected, remove an USB cable extenders. For best results, use a 6' (5 m) USB cable.

Resolving Screen Share issues

- For basic troubleshooting for Screen Sharing for Apple devices, see *Resolving Screen Share issues for Apple devices* on page 54.
- For basic troubleshooting for Screen Sharing for Android devices, see *Resolving Screen Share issues for Android mobile devices* on page 57.
- For basic troubleshooting for Screen Sharing for Windows computers, see *Resolving Screen Share issues for Windows computers* on page 62.
- For basic troubleshooting for Screen Sharing for the Chrome browser, see *Resolving Screen Share issues for Chrome browser or Chromebook* on page 60.
- Help us out. Give us some feedback about the Screen Share beta experience. Contact us here.

Symptom	Cause	Solution
Mobile devices and computers can't see the interactive flat panel.	School networks often block a number of ports from communicating across networks.	Ask the administrator to allow • TCP ports 7000, 8008, 8009, 47000, 7100, 49228, 50259 • UDP ports 62572 and 54780 • If using Google Cast, UDP port 1900 • If using Windows computer or a Mac computer, port 5353.
	The interactive flat panel's casting ID may not have propagated yet through the network or may be cached on the network when it's not actually available	Wait several minutes and attempt to connect again.

Symptom	Cause	Solution
	You're using Miracast or an unsupported wireless screen casting method.	See Using Screen Sharing in the *SMART kapp iQ Pro board user's guide* (smarttech.com/kb/170812).
Screen Share is not working for Windows computers.	The firewall might be blocking access	There might be an issue with your Windows firewall. • Windows 7 operating system: See Allow a program to communicate through Windows Firewall (windows.microsoft.com/en-us/windows/communicate-through-windows-firewall) for more information. • Windows 8 operating system: See Windows Firewall from start to finish (windows.microsoft.com/en-us/windows-8/windows-firewall-from-start-to-finish). Your anti-virus product might be blocking access. See the anti-virus product's help for more information.
Screen Share is not working for Mac computers.	The firewall might be blocking access	There might be an issue with your Mac firewall. See OS X: About the application firewall (support.apple.com/en-ca/HT201642) for more information. Your anti-virus product might be blocking access. See the anti-virus product's help for more information.
	AirPlay and GoogleCast discovery aren't working	The network must be allowed to run Bonjour and mDNS, and Multicast must be enabled.
	AirPlay cannot cross subnets or VLANs	Ensure your device and interactive flat panel are on the same VLAN or subnet
AirPlay is not displaying on my iOS mobile device.	[N/A]	Ensure your iOS device is on the same network as the interactive flat panel. Try connecting your interactive flat panel with a wired network connection. See Get help with AirPlay and AirPlay Mirroring on your iPhone, iPad, or iPod touch (support.apple.com/en-ca/HT204291) for more information.
Android devices are unable to Screen Share.	[N/A]	Ensure your Android mobile device is on the same network as the interactive flat panel. Casting the screen of your Android mobile device is available on mobile devices running Android 4.4.2 or later. Turn off Power Saving mode on your Android device. If you've downloaded the Google Cast app, see Cast your Android screen from the Chromecast app (support.google.com/chromecast/answer/6059461) Your anti-virus product might be blocking access. See the anti-virus product's help for more information.
	Your network consists of multiple access points connected to a single wireless LAN controller (WLC).	See Chromecast Deployment Guide, Release 7.6 (cisco.com/c/en/us/td/docs/wireless/controller/technotes/7-6/chromecastDG76/ChromecastDG76.html). See Chromecast mDNS Service in order to Cast Screen Configuration on WLC (cisco.com/c/en/us/support/docs/wireless-mobility/wireless-mobility/119017-config-chromecast-mdns-wlc-00.html).

Symptom	Cause	Solution
The screen is not responding to touch or you're unable to write or draw with the pens.	[N/A]	If you're sharing content from your computer or mobile device to the board using Screen Share, you're unable to interact with the screen using your fingers or pens.
Screen Share app closes unexpectedly or the video stops playing on the interactive flat panel.	Your interactive flat panel is connected to a 2.4Ghz network.	Connect your interactive flat panel to a 5Ghz network.

Resolving Screen Share issues for Apple devices

What is Screen Share?

If your mobile device or computer is on the same network as the SMART kapp iQ Pro interactive flat panel, you can use the interactive flat panel's Screen Share app to share audio and video content from your mobile device or computer to the interactive flat panel.

How do I share content from my iPhone, iPad or Mac computer?

- Using AirPlay on your Mac computer or iOS mobile device. See Using Screen Share in the *SMART kapp iQ Pro user's guide* (smarttech.com/kb/170812).
- For more information about connecting a Mac computer, see *Get help in Use AirPlay to display video from your Mac on an HDTV* (support.apple.com/HT201343).
- For more information about connecting an iOS mobile device, see *Get help with AirPlay and AirPlay Mirroring on your iPhone, iPad, or iPod touch* (support.apple.com/HT204291).

Why can't I find my SMART kapp iQ Pro interactive flat panel's name in the list of devices?

- Make sure your mobile device or computer is on the same network as the interactive flat panel.
- If your interactive flat panel is using a wired network connection, try connecting it to a wireless network.

  Wired and wireless networks don't often share the same network subnet. Connecting the board to a wireless network might help the connection between the interactive flat panel and a mobile device or computer that's connected wirelessly.
- Ensure the interactive flat panel and computer have the correct date and time set. See Page 74 for more information. See your computer's user guide for more information.

- On your mobile device, turn Airplane mode on and then off on your mobile device. If you can't see the board's name in the list of devices, restart your mobile device.

  Restarting your mobile device can clear network address information that your mobile device had cached. Restarting the mobile device can also reinitialize audio and video encoders that might have stopped working properly.

- On your computer, turn Wi-Fi off and then back on, or disconnect and then reconnect the Ethernet cable. If the interactive flat panel's name still doesn't appear in the list of devices, restart your computer.

  Restarting your computer can clear network address information that your computer had cached. Restarting the computer can also reinitialize audio and video econders that might have stopped working properly.

- Restart your board. See the Standby button in *Standby button* on page 5.
- If you've restarted your interactive flat panel and still don't see the interactive flat panel's name in the list of devices, wait several minutes and then try to connect to the interactive flat panel again.
- Make sure your computer or device has the latest operating software.

Why am I experiencing performance issues?

Performance issues might appear as choppy video or audio that isn't in sync with the video.

- The interactive flat panel and the mobile device or computer could be connected to different wireless access points, which can increase latency. On the mobile device, turn Airplane mode on and back off to try to connect to a closer access point. On the computer, turn Wi-Fi off and then back on, or disconnect and then reconnect the Ethernet cable to try to connect to a closer access point.
- Make sure the antenna is attached to the AM30 appliance. See *Appendix F: Installing the AM30 appliance antenna* on page 101 for more information.
- Reduce your Mac computer's display resolution to 1920 × 1080 or lower.
- Sharing videos or playing video games with frequent screen updates requires more network bandwidth. Try reducing the video quality to improve performance. See *Evaluating the impact of Screen Share on your network data usage* on page 27.
- Make sure your computer or device has the latest operating software.

I'm experiencing other issues

- If you see video on the interactive flat panel but don't hear audio, make sure the volume on

your iOS device is turned up and the interactive flat panel is not muted.

- If you see video on the interactive flat panel but don't hear audio, ensure the Ring/Silent switch isn't set to silent on your mobile device.
- Restart the Screen Share app and its discovery services.
  a. On the interactive flat panel, open the launcher.

     The launcher appears.

  b. Press **Settings**
  c. Scroll to **Applications** > **Screen Share [beta]**.
  d. Press **Reset**.
- If you can see your interactive flat panel but can't connect to it, open the Screen Share app.
  a. On the interactive flat panel, open the launcher.

     The launcher appears.

  b. Press **Screen Share**.
- See *Resolving Screen Share issues* on page 52 for more information.
- If a interactive flat panel's name appears more than once, contact your system administrator.
- The screen is not responding to touch or you're unable to write or draw with the pens.

  Using your fingers or the pens to interact with the screen is not supported while using Screen Share.
- If the issues persist even after you've restarted your Mac computer or iOS mobile device and ensured they are on the same network as the interactive flat panel, contact your system administrator.

I'd like to give feedback

- Help us out. Give us some feedback about the Screen Share beta experience. Contact us here.

Supported Apple devices and operating systems

The following Apple operating systems support Screen Share.

- iOS 9 or later
- Mac OS X 10.11 (El Capitan) or later

The following Apple devices support Screen Share.

- iPhone 4 S or later
- iPad 2 or later
- iPod touch (5th generation) or later

Resolving Screen Share issues for Android mobile devices

What is Screen Sharing?

If your mobile device is on the same network as the SMART kapp iQ Pro interactive flat panel, you can use the interactive flat panel's Screen Share app to share audio and video content from your mobile device to the board.

How do I share content from my Android mobile device?

Use the Google Home app. See Using Screen Share in the *SMART kapp iQ Pro user's guide* (smarttech.com/kb/171129).

Why can't I find my SMART kapp iQ Pro interactive flat panel's name in the list of devices?

- Make sure your mobile device is on the same network as the SMART kapp iQ Pro interactive flat panel.
- Not all Android devices can initiate Screen Share from the notification drawer. Download the Google Home app from Google Play to use Screen Share.
- If your interactive flat panel is using a wired network connection, try connecting it to a wireless network.

  Wired and wireless networks don't often share the same network subnet. Connecting the board to a wireless network might help the connection between the interactive flat panel and a mobile device or computer that's connected wirelessly.
- Make sure the interactive flat panel and mobile device are set to the correct date and time. See Page 74 for more information. See your mobile device's user guide for more information.

- On your mobile device, turn Airplane mode on and then off again. If you can't see the board's name in the list of devices, restart your mobile device.

  Restarting your mobile device can clear network address information that your mobile device had cached. Restarting the mobile device can also reinitialize audio and video encorders that might have stopped working properly.
- Restart your Android mobile device.
- Restart your board. See the Standby button in *Standby button* on page 5.
- If you've restarted your interactive flat panel and still don't see the interactive flat panel's name in the list of devices, wait several minutes and then try to connect to the interactive flat panel again.
- Ensure you have the latest operating software on your Android mobile device. Make sure you have no pending system updates for your Android mobile device.

Why am I experiencing performance issues?

Performance issues might appear as choppy video or audio that isn't in sync with the video.

- Your mobile device could be connected to different access points than your interactive flat panel which can increase latency. Turn Airplane mode on and then off on your mobile device to try to connecting to a closer access point.
- Make sure the antenna is attached to the AM30 appliance. See *Appendix F: Installing the AM30 appliance antenna* on page 101 for more information.
- Sharing videos or playing video games with frequent screen updates requires more network bandwidth. Try reducing the video quality to improve performance. See *Evaluating the impact of Screen Share on your network data usage* on page 27.
- Your mobile device may not be optimized for sharing its screen and is limited to lower quality performance. Try connecting with a different mobile device.
- Ensure you have the latest operating software on your Android mobile device. Make sure you have no pending system updates for your Android mobile device.

I'm experiencing other issues

- If the mobile device's video appears on the interactive flat panel but you don't hear audio:
  - Make sure the volume on your mobile device is turned up and the interactive flat panel is not muted.
  - Make sure you have the latest operating software on your Android mobile device.
  - Restart your mobile device.

- If you can see your interactive flat panel but can't connect to it, open the Screen Share app.
  a. On the interactive flat panel, open the launcher.

     The launcher appears.

  b. Press **Screen Share**.
- Restart the Screen Share app and its discovery services.
  a. On the interactive flat panel, open the launcher.

     The launcher appears.

  b. Press **Settings**
  c. Scroll to **Applications** > **Screen Share [beta]**.
  d. Press **Reset**.
- If a interactive flat panel's name appears more than once, contact your system administrator.
- The screen is not responding to touch or you're unable to write or draw with the pens.

  Using your fingers or the pens to interact with the screen is not supported while using Screen Share.
- Turn off Power Saving mode on your Android device.
- Make sure your Android mobile device is using the latest operating software and has no pending system updates.
- See *Resolving Screen Share issues* on page 52 for more information.
- Contact your system administrator.

I'd like to give feedback

- Help us out. Give us some feedback about the Screen Share beta experience. Contact us here.

Supported Android devices and operating systems

- All devices running Android 4.4.2 or later support the Cast Screen feature. See Optimized devices for Android Screen casting (support.google.com/chromecast/answer/6293757).

  NOTE

  Not all mobile devices have been optimized for screen casting.

- Make sure Power Saving mode is off on your Android mobile device. Power Saving mode can limit the mobile device's processing power, which could affect the performance of the Cast Screen feature.

Resolving Screen Share issues for Chrome browser or Chromebook

What is Screen Sharing?

If your computer is on the same network as the SMART kapp iQ Pro interactive flat panel, you can use the computer's Chrome browser and the interactive flat panel's Screen Share app to share audio and video content from your computer to the interactive flat panel.

How do I share content using the Chrome browser or Chromebook?

- You may need to download the Google Cast extension for Chrome. See Using Screen Share in the *SMART kapp iQ Pro user's guide* (smarttech.com/kb/171129).
- For more information about the Google Cast browser extension, see *Casting a tab or entire desktop* (support.google.com/googlecast/answer/3228332).
- For more information about sharing content from your Chromebook with Google Cast, see *Use Chromecast with your Chromebook* (support.google.com/chromebook/answer/3289520).

Why can't I find my SMART kapp iQ Pro interactive flat panel's name in the list of devices?

- Make sure your computer is on the same network as the board.
- If your board is using a wired network connection, try connecting it to a wireless network.

  Wired and wireless networks don't often share the same network subnet. Connecting the interactive flat panel to a wireless network might help the connection between the interactive flat panel and a mobile device or computer that's connected wirelessly.
- Make sure the interactive flat panel and computer have the correct date and time set. See Page 74 for more information. See your computer's user guide for more information.

- On your computer, turn Wi-Fi off and then back on, or disconnect and then reconnect the Ethernet cable. If the interactive flat panel's name still doesn't appear in the list of devices, restart your computer.

  Restarting your computer can clear network address information that your computer had cached. Restarting the computer can also reinitialize audio and video encoders that might have stopped working properly.

- For more information about the Google Cast browser extension, see *Casting a tab or entire desktop* (support.google.com/googlecast/answer/3228332).
- Restart your board. See the Standby button in *Standby button* on page 5.
- If you've restarted your interactive flat panel and still don't see the interactive flat panel's name in the list of devices, wait several minutes and try to connect to the interactive flat panel again.

Why am I experiencing performance issues?

- Not all devices are designed for video encoding for Screen Sharing, so video streaming might not behave as expected.

  Sharing videos or playing video games with frequent screen updates requires more network bandwidth. Try reducing the video quality to improve performance. See *Evaluating the impact of Screen Share on your network data usage* on page 27.

- SMART kapp iQ Pro interactive flat panel's Screen Share app has not been optimized for performance with Chromebooks. For best results, limit usage to static content.
- The interactive flat panel and the computer might could be connected to different wireless access points, which can increase latency. On the computer, turn Wi-Fi off and then back on, or disconnect and then reconnect the Ethernet cable to try to connect to a closer access point.
- Make sure the antenna is attached to the AM30 appliance. See *Appendix F: Installing the AM30 appliance antenna* on page 101 for more information.

I'm experiencing other issues

- If you can see your interactive flat panel but can't connect to it, open the Screen Share app.
  a. On the interactive flat panel, open the launcher.

     The launcher appears.

  b. Press **Screen Share** .

- Restart the Screen Share app and its discovery services.
  a. On the interactive flat panel, open the launcher.

     The launcher appears.

  b. Press **Settings**
  c. Scroll to **Applications** > **Screen Share** [**beta**].
  d. Press **Reset**.
- See *Resolving Screen Share issues* on page 52 for more information.
- The screen is not responding to touch or you're unable to write or draw with the pens.

  Using your fingers or the pens to interact with the screen is not supported while using Screen Share.

I'd like to give feedback

- Help us out. Give us some feedback about the Screen Share beta experience. Contact us here.

Resolving Screen Share issues for Windows computers

What is Screen Sharing?

If your computer is on the same network as the SMART kapp iQ Pro interactive flat panel, you can use the interactive flat panel's Screen Sharing app to share audio and video content from your computer to the interactive flat panel.

How do I share content from my Windows computer?

- Use the Chrome browser. See Using Screen Share in the *SMART kapp iQ Pro Pro interactive flat panel user's guide* (smarttech.com/kb/171129).
- You can purchase AirParrot, an application that allows you to share your display, an application, audio or a media file. See airsquirrels.com/airparrot/features/win.
- If you're sharing content using the Google Cast extension, see Use Chromecast with your Chromebook (support.google.com/chromebook/answer/3289520).

- If you're sharing content using AirParrot, see *AirParrot 2 does not see a Chromecast in our office* (help.airsquirrels.com/support/solutions/articles/1000195447-airparrot-2-does-not-see-a-chromecast-in-our-office-) or *Can I extend my desktop on Windows 10* (help.airsquirrels.com/support/solutions/articles/1000199265-can-i-extend-my-desktop-on-windows-10-).

Why can't I find my SMART kapp iQ Pro interactive flat panel's name in the list of devices?

- Make sure your computer is on the same network as the board.
- If your board is using a wired network connection, try connecting it to a wireless network.

  Wired and wireless networks don't often share the same network subnet. Connecting the interactive flat panel to a wireless network might help the connection between the interactive flat panel and a mobile device or computer that's connected wirelessly.
- Make sure the interactive flat panel and computer have the correct date and time set. See *Date & time* on page 74 for more information. See your computer's user guide for more information.
- On your computer, turn Wi-Fi off and then back on, or disconnect and then reconnect the Ethernet cable. If the interactive flat panel's name still doesn't appear in the list of devices, restart your computer.

  Restarting your computer can clear network address information that your computer had cached. Restarting the computer can also reinitialize audio and video encoders that might have stopped working properly.
- Restart your board. See the Standby button in *Standby button* on page 5.
- If you've restarted your interactive flat panel and still don't see the interactive flat panel's name in the list of devices, wait several minutes and try to connect to the interactive flat panel again.
- Make sure the operating system on your Windows computer is updated.
- Windows Wireless Display (Miracast) is currently not supported.
  - Use Google Cast from Chrome browser. See Using Screen Share in the board user's guide (smarttech.com/kb/170812).

    Use Google Cast from Chrome browser. See Using Screen Share in the *SMART kapp iQ Pro Pro interactive flat panel user's guide* (smarttech.com/kb/171129).
  - You can purchase AirParrot, an application that allows you to share your computer's display, an application, audio or a media file. See airsquirrels.com/airparrot/features/win.

Why am I experiencing performance issues?

- If your network is slow or congested, that affects Screen Sharing. Contact your administrator.
- The Wi-Fi signal could be weak. Contact your administrator.
- Your device could be connected to different access points than your interactive flat panel which can increase latency. Turn Airplane mode on and then off on your computer to try to connecting to a closer access point.
- Sharing videos or playing video games with frequent screen updates requires more network bandwidth. Try reducing the video quality to improve performance. See *Evaluating the impact of Screen Share on your network data usage* on page 27.
- Make sure the antenna is attached to the AM30 appliance. See *Appendix F: Installing the AM30 appliance antenna* on page 101 for more information.
- Reduce your display's resolution to 1920 × 1080 or lower.
- Make sure the operating system on your Windows computer is updated.
- If you're using AirParrot, make sure AirParrot is updated.
- If you're using Chrome, make sure Chrome is updated.
- If you've restarted your interactive flat panel and still don't see the interactive flat panel's name in the list of devices, wait several minutes and then try to connect to the interactive flat panel again.

I'm experiencing other issues

- If you can see your interactive flat panel but can't connect to it, open the Screen Share app.
  a. On the interactive flat panel, open the launcher.

     The launcher appears.

  b. Press **Screen Share**.
- Restart the Screen Share app and its discovery services.
  a. On the interactive flat panel, open the launcher.

     The launcher appears.

  b. Press **Settings**
  c. Scroll to **Applications** > **Screen Share [beta]**.
  d. Press **Reset**.
- See *Resolving Screen Share issues* on page 52 for more information.

- Contact your system administrator.

I'd like to give feedback

- Help us out. Give us some feedback about the Screen Share beta experience. Contact us here.

Using SMART software to resolve issues

For more information about using SMART software to resolve issues with your interactive flat panel, see support.smarttech.com/docs/hardware/kapp/kapp-iq/en/troubleshooting/basic-troubleshooting/using-smart-software.cshtml.

Chapter A

Using the SMART kapp iQ Pro on-screen display menu

For more information about the on-screen display menu, see support.smarttech.com/docs/hardware/kapp/kapp-iq-pro/en/installing-and-maintaining/using-the-osd-menu/default.cshtml.

Appendix B

Adjusting the SMART kapp iQ Pro settings

About device 69
Diagnostics 70
Language 71
Country 71
Security 71
Wi-Fi 72
Advanced Wi-Fi options 73
Ethernet 73
Date & time 74
Usage Data 74
Auto Update 74
Launcher 75
SMART kapp Whiteboard 75
Screen Share [beta] 76

You can access the SMART kapp iQ Pro interactive flat panel's settings using the icon in the launcher.

NOTE

Older versions of SMART kapp iQ Pro interactive flat panel don't have all Settings options available. See Identifying kapp iQ system and AM30 appliance version (kb.smarttech.com/?q=18190).

About device

Option	Values	Function	Notes
▸ Product information	[N/A]	[N/A]	[N/A]
• Board name	[N/A]	Select a name for your board	[N/A]

Option	Values	Function	Notes
• Help	[N/A]	Displays the SMART support site for the SMART kapp iQ Pro interactive flat panel	[N/A]
• Send Feedback	[N/A]	Send feedback to SMART about the SMART kapp iQ Pro experience	[N/A]
• Legal Information	[N/A]	Displays the open source licenses, the SMART end user license agreement and SMART intellectual property information	[N/A]
▸ Board information	[N/A]	[N/A]	[N/A]
• Build number	[N/A]	Displays the SMART kapp iQ Pro interactive flat panel's build number	[N/A]
• Touch controller version	[N/A]	Displays the SMART kapp iQ Pro interactive flat panel's touch controller version	[N/A]
• Scaler version	[N/A]	Displays the SMART kapp iQ Pro interactive flat panel's scaler version	[N/A]
• Serial number	[N/A]	Displays the AM30 appliance's serial number	[N/A]
• Bluetooth address	[N/A]	Displays the SMART kapp iQ Pro interactive flat panel's Bluetooth address	[N/A]
• Up time	[N/A]	Displays how long the SMART kapp iQ Pro interactive flat panel has been turned on	Turning off the interactive flat panel restarts the up time to 0.
▸ Board configuration	[N/A]	[N/A]	[N/A]
• Factory data reset	[N/A]	Resets all options to their default values	Only administrators should reset the interactive flat panel.

Diagnostics

Option	Values	Function	Notes
• Write logs to USB	[N/A]	Copy diagnostic logs to a USB drive	[N/A]
▸ Input	[N/A]	[N/A]	[N/A]
• Touch & calibration	[N/A]	Calibrate the SMART kapp iQ Pro interactive flat panel	[N/A]
• Show touches	[N/A]	Displays visual feedback of touches on the screen	[N/A]
• Pointer location	[N/A]	Displays touch feedback	[N/A]

Language

Option	Values	Function	Notes
• Language	[Languages]	Sets the language for the SMART kapp iQ Pro interactive flat panel settings menu	To select a different language for the on-screen display menu for the interactive flat panel, see Language in OSD menu options (support.smarttech.com/docs/hardware/kapp/kapp-iq-pro/en/installing-and-maintaining/kapp-settings/default.cshtml)

Country

Option	Values	Function	Notes
• Country	[Countries]	Sets the SMART kapp iQ Pro interactive flat panel's country	[N/A]

Security

Option	Values	Function	Notes
▸ Clean up	[N/A]	[N/A]	[N/A]
• Clean up policy	Disabled, Manually reset with the **Clean Up** button in the launcher, 1 hour, 2 hours, 3 hours, 1 day	Sets how often the board resets	[N/A]
• Clean up the whiteboard	[N/A]	Saves the Whiteboard session to the Library and erases the Whiteboard	[N/A]
• Clean up the browser	[N/A]	Closes the browser tabs, and clears the history, cache and cookies	[N/A]
• Clean up other applications	[N/A]	Closes open applications	[N/A

Wi-Fi

NOTE

To add a proxy, see *Adding a proxy* on page 37.

Option	Values	Function	Notes
▸ Wi-Fi	[Wireless networks]	Select a wireless network	Turn on Wi-Fi to discover networks.
• Scan	[N/A]	Scan for wireless networks	Press **More** ⋮ to access this option.
• WPS Pin Entry	[N/A]	[N/A]	Not used
• Wi-Fi Direct	[N/A]	[N/A]	Not used
• Advanced	[N/A]	Set advanced options for Wi-Fi	See *Advanced Wi-Fi options* on the facing page for the options.
• WPS push button	[N/A]	Connect to a wireless network using Wi-Fi Protected Setup	[N/A]
• Add network	[N/A]	Add a wireless network	[N/A]

Advanced Wi-Fi options

Option	Values	Function	Notes
▸ Advanced	[N/A]	[N/A]	[N/A]
• Network notification	[N/A]	Notifies you when an open wireless network is available	[N/A]
• Keep Wi-Fi on during sleep	Always, Only when plugged in, Never	Determines if the Wi-Fi remains on if the board goes to sleep	[N/A]
• Scanning always available	[N/A]	Allow Google's location service and other applications to scan for networks, even when Wi-Fi is turned off	[N/A]
• Wi-Fi frequency band	Auto, 5 Ghz, 2.4 Ghz	Wi-Fi frequency band	[N/A]
• Install certificates	[N/A]	Install certificates to connect to a network	[N/A]
• Wi-Fi optimization	[N/A]	Minimize battery usage when Wi-Fi is enabled	[N/A]
• MAC address	[N/A]	Displays the SMART kapp iQ Pro interactive flat panel's MAC address	[N/A]
• IP address	[N/A]	Displays theSMART kapp iQ Pro interactive flat panel's IP address	[N/A]

Ethernet

NOTE

Manual configuration isn't available. The IP address is automatically configured via DHCP.

Option	Values	Function	Notes
• IP address	[N/A]	Displays the SMART kapp iQ Pro interactive flat panel's IP address	[N/A]
• MAC address	[N/A]	Displays the SMART kapp iQ Pro interactive flat panel's MAC address	[N/A]

Date & time

Option	Values	Function	Notes
• Automatic date & time	[N/A]	Sets the SMART kapp iQ Pro interactive flat panel's date and time automatically	Configure the network to allow Network Time Protocol (NTP) requests to Internet time servers. See *Configuring the network for the Screen Share app* on page 26.
• Set date	[N/A]	Sets the SMART kapp iQ Pro interactive flat panel's date	Disable **Automatic date & time** to set the date manually
• Set time	[N/A]	Sets the SMART kapp iQ Pro interactive flat panel's time	Disable **Automatic date & time** to set the time manually
• Select time zone	[N/A]	Sets the SMART kapp iQ Pro interactive flat panel's time zone	[N/A]
• Use 24-hour format	[N/A]	Displays the SMART kapp iQ Pro interactive flat panel's time using the 24-hour clock	[N/A]
• Choose date format	[N/A]	Sets the SMART kapp iQ Pro interactive flat panel's date format	[N/A]

Usage Data

Option	Values	Function	Notes
Share Usage Data	[N/A]	Sends usage statistics and error reports to SMART	[N/A]

Auto Update

NOTE

If you want to prevent automatic system software updates, block access to https://ws.kappboard.com.

Option	Values	Function	Notes
• Updates Channel	Stable Channel, Beta Channel	Sets which system software updates the interactive flat panel receives.	When switching from the Beta Channel to the Stable Channel, a factory reset occurs. See *Factory data reset* on page 70 for more information about factory reset.

Option	Values	Function	Notes
• Check for Updates Now	[N/A]	Checks for updates to the system software **NOTE** The interactive flat panel must be connected to the Internet to check for system software updates.	If an update is available, the text changes to **Apply update now**.

Launcher

Option	Values	Function	Notes
• Launcher	[N/A]	Select the apps available on the launcher	See *Adding or removing apps from the launcher* on page 37 for more information.

SMART kapp Whiteboard

Option	Values	Function	Notes
▸ Whiteboard storage	[N/A]	[N/A]	[N/A]
• Library	On, Off	Enables or disables saving whiteboard sessions.	[N/A]
• Save whiteboards in library	For 1 week, For 1 Month, Indefinitely	Sets how long the whiteboard sessions are saved.	[N/A]
▸ Mobile app	[N/A]	[N/A]	[N/A]
• Saving Whiteboards	On, Off	Enables or disables the Capture function in the SMART kapp app.	If this is off, the QR code is not visible. The SMART kapp app is unable to connect to the board and your mobile device is unable to save snapshots of the board in the app.
• Sharing Whiteboards	On, Off	Enables or disables the Invite function on the SMART kapp app.	If this is off, you're unable to invite people to your session.

Screen Share [beta]

Option	Values	Function	Notes
▸ Screen Share [beta]	[N/A]	[N/A]	[N/A]
• Reset	[N/A]	Closes and restarts Screen Share app and its discovery services.	You can restart Screen Share as a troubleshooting step if a mobile device or computer can't find or connect to the interactive flat panel.

Appendix C

Configuring the network

Network administrators need to configure the network so users can use the Screen Share app, update the system software automatically over the air and to enable the interactive flat panel to set the date and time automatically.

Network ports

To use the Screen Share app

NOTE

Using a 5GHz network connection may provide a better experience with the Screen Share app

Complete the following tasks on the network to allow mobile devices and computers to use AirPlay and Google Cast to use the Screen Share app:

- open the required TCP/UDP ports (see the following table)
- configure the network to allow Bonjour and mDNS (multicast)
- configure the network to allow Network Time Protocol (NTP) requests to Internet time servers

Protocol	Port Range	Feature
TCP	80	Outbound http
UDP	123	Network Time Protocol
TCP	3689	iTunes music sharing
TCP	5000	Audio streaming
TCP	5353	mDNS
UDP	5353	mDNS
TCP	7000	Picture sharing
TCP	7001	Video streaming
UDP	7010	Display mirroring
UDP	7011	Display mirroring

Protocol	Port Range	Feature
TCP	7100	Display mirroring
TCP	47000	Audio negotiation
TCP	49152–65535	Dynamic ports
UDP	49152–65535	Dynamic ports
TCP	49228	Google Cast
TCP	50259	Google Cast
UDP	54780	Google Cast
UDP	62572	Google Cast

To allow automatic system software updates

- add https://ws.kappboard.com to the network's whitelist
- add http://downloads.smarttech.com to the network's whitelist

To prevent automatic system software updates

block access to https://ws.kappboard.com

Appendix D

Supported devices for Screen Share

This is a list of supported devices for Screen Share.

Supported Apple devices and operating systems

The following Apple operating systems support Screen Share.

- iOS 9 or later
- Mac OS X 10.11 (El Capitan) or later

The following Apple devices support Screen Share.

- iPhone 4 S or later
- iPad 2 or later
- iPod touch (5th generation) or later

Supported Android devices and operating systems

- All devices running Android 4.4.2 or later support the Cast Screen feature. See Optimized devices for Android Screen casting (support.google.com/chromecast/answer/6293757).

  NOTE

  Not all mobile devices have been optimized for screen casting.

- Make sure Power Saving mode is off on your Android mobile device. Power Saving mode can limit the mobile device's processing power, which could affect the performance of the Cast Screen feature.

Appendix E

Remotely managing the interactive flat panel

Connecting a computer to the interactive flat panel 81
Configuring the computer's serial interface settings 82
Power modes 83
Commands and responses 83
SMART kapp iQ Pro 55 and 65 command inventory 85
- Power state 85
- Source 86
- Video 86
- Audio 88
- System information 89

SMART kapp iQ Pro 65-V2 and 75 command inventory 91
- Power state 92
- Source 92
- Video 93
- Audio 95
- Multi-Window 95
- System information 97

You can connect a computer to the room control input on the SMART kapp iQ Pro interactive flat panel to remotely select video inputs, turn the interactive flat panel on or off and get information about the interactive flat panel's current settings, such as contrast and power state.

Connecting a computer to the interactive flat panel

To connect a computer to the interactive flat panel

Connect an RS-232 cable from the computer's serial output to the room control input on the connector panel.

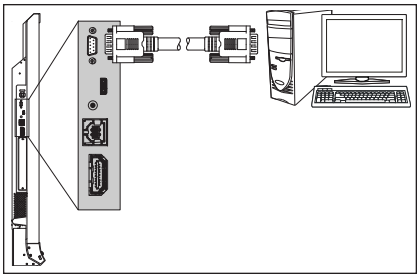

SMART kapp iQ Pro 55
SMART kapp iQ Pro 65

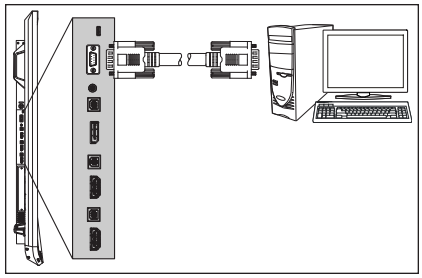

SMART kapp iQ Pro 65-V2
SMART kapp iQ Pro 75

IMPORTANT

Do not use a null modem cable. Use only a standard RS-232 cable.

Configuring the computer's serial interface settings

Configure the computer's serial interface before sending commands to the interactive flat panel.

To configure the computer's serial interface

1. Turn on the interactive flat panel.
2. Turn on the computer, and then start the serial communications program or terminal emulation program.
3. Activate local echo.
4. Configure the serial interface settings using the following values, and then press ENTER.

Baud rate	19200
Data length	8
Parity bit	None
Stop bit	1

A command prompt (>) appears on the following line, and the interactive flat panel can now accept commands from the computer.

NOTE

If no message appears or an error message appears, the serial interface isn't configured correctly. Repeat steps 3 and 4.

Power modes

The interactive flat panel has three power modes:

- On
- Power Save
- Standby

All commands are available when the interactive flat panel is on. Some commands are available when the interactive flat panel is in Standby mode.

Commands and responses

To access interactive flat panel information or to adjust interactive flat panel settings using the room control system, type commands after the command prompt (>), and then wait for the response from the interactive flat panel.

CORRECT

```
>get contrast
contrast=55
```

If you type a command that the room control system doesn't recognize, you receive an invalid command response.

In the example below, the user included an extra space in the contrast command.

INCORRECT

```
>set con trast=65
invalid cmd=set con trast=65
```

NOTES

- Use ASCII formatted commands.
- Commands aren't case-sensitive.
- Review each entry carefully before you press ENTER.
- Don't send another command until you receive the response and the next command prompt.

To view a list of available commands

Type **?** at the command prompt, and then press ENTER.

To identify the current value of a setting

Use the **get** command.

This example shows how to get the contrast level:

```
>get contrast
contrast=55
```

To identify the current value of a setting for a specific video input

Use the **get** command and specify the video input.

This example shows how to get the contrast level for the HDMI video input:

```
>get contrast hdmi1
contrast hdmi1=65
```

NOTE

You must connect the video input to the interactive flat panel to identify a value for it, but the video input doesn't need to be in use.

To assign a value to a setting

Use the **set** command.

This example sets the contrast level to 65:

```
>set contrast=65
contrast=65
```

To assign a value to a setting for a specific video input

Use the **set** command and specify the video input.

This example sets the contrast level to 70 for the HDMI video input:

```
>set contrast hdmi1=70
contrast hdmi1=70
```

NOTE

You must connect the video input to the interactive flat panel to set a value for it, but the video input doesn't need to be in use.

To increase or decrease the value of a setting

Use the **set** command to increase or decrease the value by a designated number.

This example increases the contrast level by 5:

```
>set contrast +5
contrast=70
```

This example decreases the contrast level by 15:

```
>set contrast -15
contrast=55
```

SMART kapp iQ Pro 55 and 65 command inventory

This section contains the commands for SMART kapp iQ Pro 55 and 65 interactive flat panels.

Power state

Use the following commands to identify power state settings.

Command	Response	Possible values	Standby mode
get intpowerstate	intpowerstate=*[Value]*	on standby dpms novideo confirm proximitywait welcome	Yes
get powerstate	powerstate=*[Value]*	on off standby	Yes

Use the following commands to assign power state settings.

Command	Possible values	Response	Standby mode
set powerstate *[Value]*	=on =off =standby	powerstate=*[Value]*	Yes

Source

Use the following commands to identify source settings.

Command	Response	Possible values	Standby mode
get input	input=*[Value]*	hdmi1 ops/hdmi2	Yes
get videoinputs	videoinputs=*[Value]*	hdmi1 ops/hdmi2	Yes

Use the following commands to assign source settings.

Command	Possible values	Response	Standby mode
set input *[Value]*	=hdmi1 =ops/hdmi2 =next	input=*[Value]*	Yes

Video

Use the following commands to identify video settings.

Command	Response	Possible values	Standby mode
get displaymode	displaymode=*[Value]*	standard user dynamic	No
get contrast	contrast=*[Value]*	0–100	No
get brightness	brightness=*[Value]*	0–100	No
get tint	tint=*[Value]*	0–100	No
get sharpness	sharpness=*[Value]*	0–100	No

Command	Response	Possible values	Standby mode
get colortemp	colortemp=*[Value]*	normal warm cool user	No
get red	red=*[Value]*	0–100	No
get green	green=*[Value]*	0–100	No
get blue	blue=*[Value]*	0–100	No
get blacklevel	blacklevel=*[Value]*	0–100	No

Use the following commands to assign video settings.

Command	Possible values	Response	Standby mode
set displaymode *[Value]*	=standard =user =dynamic	displaymode=*[Value]*	No
set contrast *[Value]*	+*[Incremental value]* -*[Incremental value]* =0–100	contrast=*[Value]*	No
set brightness *[Value]*	+*[Incremental value]* -*[Incremental value]* =0–100	brightness=*[Value]*	No
set tint *[Value]*	+*[Incremental value]* -*[Incremental value]* =0–100	tint=*[Value]*	No
set sharpness *[Value]*	+*[Incremental value]* -*[Incremental value]* =0–100	sharpness=*[Value]*	No
set colortemp *[Value]*	=normal =warm =cool =user	colortemp=*[Value]*	No
set red *[Value]*	+*[Incremental value]* -*[Incremental value]* =0–100	red=*[Value]*	No
set green *[Value]*	+*[Incremental value]* -*[Incremental value]* =0–100	green=*[Value]*	No
set blue *[Value]*	+*[Incremental value]* -*[Incremental value]* =0–100	blue=*[Value]*	No

Command	Possible values	Response	Standby mode
set blacklevel *[Value]*	+*[Incremental value]* -*[Incremental value]* =0–100	blacklevel=*[Value]*	No
set picturereset *[Value]*	=yes	picturereset=*[Value]*	No

Audio

Use the following commands to identify audio settings.

Command	Response	Possible values	Standby mode
get volume	volume=*[Value]*	0–100	No
get mute	mute=*[Value]*	on off	No
get audioinput	audioinput=*[Value]*	usbaudio HDMI OPSdigital	No
get treble	treble=*[Value]*	0–100	No
get bass	bass=*[Value]*	0–100	No
get audioeq120	audioeq120=*[Value]*	0–100	No
get audioeq500	audioeq500=*[Value]*	0–100	No
get audioeq1200	audioeq1200=*[Value]*	0–100	No
get audioeq7500	audioeq7500=*[Value]*	0–100	No
get audioeq12k	audioeq12k=*[Value]*	0–100	No
get balance	balance=*[Value]*	0–100	No

Use the following commands to assign audio settings.

Command	Possible values	Response	Standby mode
set volume *[Value]*	+*[Incremental value]* -*[Incremental value]* =0–100	volume=*[Value]*	No
set mute *[Value]*	=on =off	mute=*[Value]*	No
set audioinput *[Value]*	=usbaudio =HDMI =OPSDigital	audioinput=*[Value]*	No

Command	Possible values	Response	Standby mode
set treble *[Value]*	+*[Incremental value]* -*[Incremental value]* =0–100	treble=*[Value]*	No
set bass *[Value]*	+*[Incremental value]* -*[Incremental value]* =0–100	bass=*[Value]*	No
set audioeq120 *[Value]*	=0–100	audioeq120=*[Value]*	No
set audioeq500 *[Value]*	=0–100	audioeq500=*[Value]*	No
set audioeq1200 *[Value]*	=0–100	audioeq1200=*[Value]*	No
set audioeq7500 *[Value]*	=0–100	audioeq7500=*[Value]*	No
set audioeq12k *[Value]*	=0–100	audioeq12k=*[Value]*	No
set balance *[Value]*	+*[Incremental value]* -*[Incremental value]* =0–100	balance=*[Value]*	No
set soundreset *[Value]*	=yes	soundreset=*[Value]*	No

System information

Use the following commands to identify system information settings.

Command	Response	Possible values	Standby mode
get autopoweroff	autopoweroff=*[Value]*	15–240	No
get fwverscr	fwverscr=*[Value]*	*[Scalar version firmware number]*	Yes
get fwvertouch	fwvertouch=*[Value]*	*[Touch controller firmware version number]*	Yes
get serialtouch	serialtouch=*[Value]*	*[Touch controller serial number]*	No
get opsinfo	opsinfo=*[Value]*	OPS NO OPS	No

Command	Response	Possible values	Standby mode
get language[1]	language=*[Value]*	English Arabic Danish German Spanish Finnish French Hebrew Italian Dutch Norwegian Portuguese Russian Swedish Turkish Chinese_sim	No
get modelnum	modelnum=*[Value]*	*[Model number]*	No
get serialnum	serialnum=*[Value]*	*[Serial number]*	No
get proximityinstalled	proximityinstalled=*[Value]*	yes no	
get proximity	proximity=*[Value]*	on off	Yes
get proximityreenable	proximityreenable=*[Value]*	1–10	Yes
get proximitydetected	proximitydetected=*[Value]*	yes no	No
get monitorid	monitorid=*[Value]*	1–100	No

Use the following commands to assign system information settings.

Command	Possible values	Response	Standby mode
set autopoweroff *[Value]*	+*[Incremental value]* -*[Incremental value]* =15–240	autopoweroff=*[Value]*	No
set factoryreset *[Value]*	=yes	factoryreset=*[Value]*	Yes

[1]Languages for the on-screen display menu only

Command	Possible values	Response	Standby mode
set language *[Value]*[2]	=English =Arabic =Danish =German =Spanish =Finnish =French =Hebrew =Italian =Dutch =Norwegian =Portuguese =Russian =Swedish =Turkish =Chinese_sim	language=*[Value]*	No
set proximity *[Value]*	=on =off	proximity=*[Value]*	Yes
set proximityreenable *[Value]*	=1–10	proximityreenable=*[Value]*	Yes
set monitorid *[Value]*	+*[Incremental value]* -*[Incremental value]* =1–100	monitorid=*[Value]*	No
set lyncroom *[Value]*	=reset	lyncroom=*[Value]*	No
set touchdetected *[Value]*	=yes	touchdetected=*[Value]*	No

SMART kapp iQ Pro 65-V2 and 75 command inventory

This section contains the commands for SMART kapp iQ Pro 65-V2 and 75 interactive flat panels.

[2]Languages for the on-screen display menu only

Power state

Use the following commands to identify power state settings.

Command	Response	Possible values	Standby mode
get intpowerstate	intpowerstate=*[Value]*	on standby dpms novideo confirm proximitywait welcome	Yes
get powerstate	powerstate=*[Value]*	on off standby	Yes

Use the following commands to assign power state settings.

Command	Possible values	Response	Standby mode
set powerstate *[Value]*	=on =off =standby	powerstate=*[Value]*	Yes

Source

Use the following commands to identify source settings.

Command	Response	Possible values	Standby mode
get input	input=*[Value]*	hdmi1 hdmi2 displayport ops/hdmi ops/displayport	Yes
get videoinputs	videoinputs=*[Value]*	hdmi1 hdmi2 displayport ops/hdmi ops/displayport	Yes
get videoinputdetect	videoinputdetect=*[Value]*	ops/hdmi ops/displayport off	No

Use the following commands to assign source settings.

Command	Possible values	Response	Standby mode
set input *[Value]*	=hdmi1 =hdmi2 =displayport =ops/hdmi =ops/displayport =next	input=*[Value]*	Yes
set videoinputdetect *[Value]*	=ops/hdmi =ops/displayport =off	videoinputdetect=*[Value]*	No

Video

Use the following commands to identify video settings.

Command	Response	Possible values	Standby mode
get displaymode	displaymode=*[Value]*	standard user dynamic	No
get contrast	contrast=*[Value]*	0–100	No
get brightness	brightness=*[Value]*	0–100	No
get tint	tint=*[Value]*	0–100	No
get sharpness	sharpness=*[Value]*	0–100	No
get colortemp	colortemp=*[Value]*	normal warm cool user	No
get red	red=*[Value]*	0–100	No
get green	green=*[Value]*	0–100	No
get blue	blue=*[Value]*	0–100	No
get blacklevel	blacklevel=*[Value]*	0–100	No
get localdimming[3]	localdimming=*[Value]*	on off	No

[3]SMART kapp iQ Pro 75 interactive flat panels only

Use the following commands to assign video settings.

Command	Possible values	Response	Standby mode
set displaymode *[Value]*	=standard =user =dynamic	displaymode=*[Value]*	No
set contrast *[Value]*	+*[Incremental value]* -*[Incremental value]* =0–100	contrast=*[Value]*	No
set brightness *[Value]*	+*[Incremental value]* -*[Incremental value]* =0–100	brightness=*[Value]*	No
set tint *[Value]*	+*[Incremental value]* -*[Incremental value]* =0–100	tint=*[Value]*	No
set sharpness *[Value]*	+*[Incremental value]* -*[Incremental value]* =0–100	sharpness=*[Value]*	No
set colortemp *[Value]*	=normal =warm =cool =user	colortemp=*[Value]*	No
set red *[Value]*	+*[Incremental value]* -*[Incremental value]* =0–100	red=*[Value]*	No
set green *[Value]*	+*[Incremental value]* -*[Incremental value]* =0–100	green=*[Value]*	No
set blue *[Value]*	+*[Incremental value]* -*[Incremental value]* =0–100	blue=*[Value]*	No
set blacklevel *[Value]*	+*[Incremental value]* -*[Incremental value]* =0–100	blacklevel=*[Value]*	No
set localdimming *[Value]*[4]	=on =off	localdimming=*[Value]*	No

[4]SMART kapp iQ Pro 75 interactive flat panels only

Audio

Use the following commands to identify audio settings.

Command	Response	Possible values	Standby mode
get volume	volume=*[Value]*	0–100	No
get mute	mute=*[Value]*	on off	No
get balance	balance=*[Value]*	0–100	No

Use the following commands to assign audio settings.

Command	Possible values	Response	Standby mode
set volume *[Value]*	+*[Incremental value]* -*[Incremental value]* =0–100	volume=*[Value]*	No
set mute *[Value]*	=on =off	mute=*[Value]*	No
set balance *[Value]*	+*[Incremental value]* -*[Incremental value]* =0–100	balance=*[Value]*	No
set soundreset *[Value]*	=yes	soundreset=*[Value]*	No

Multi-Window

Use the following commands to identify Multi-Window settings.

Command	Response	Possible values	Standby mode
get mw	mw=*[Value]*	off dual quad	No
get mwaudioinput	mwaudioinput=*[Value]*	window1 window2 window3 window4	No
get mwwindow1input	mwwindow1input=*[Value]*	hdmi1 hdmi2 displayport opshdmi opshdmidisplayport	No

Command	Response	Possible values	Standby mode
get mwwindow2input	mwwindow2input=*[Value]*	hdmi1 hdmi2 displayport opshdmi opshdmidisplayport	No
get mwwindow3input	mwwindow3input=*[Value]*	hdmi1 hdmi2 displayport opshdmi opshdmidisplayport	No
get mwwindow4input	mwwindow4input=*[Value]*	hdmi1 hdmi2 displayport opshdmi opshdmidisplayport	No

Use the following commands to assign Multi-Window settings.

Command	Possible values	Response	Standby mode
set mw *[Value]*	=off =dual =quad	mw=*[Value]*	No
set mwaudioinput *[Value]*	=window1 =window2 =window3 =window4	mwaudioinput=*[Value]*	No
set mwwindow1input *[Value]*	=hdmi1 =hdmi2 =displayport =opshdmi =opshdmidisplayport	mwwindow1input=*[Value]*	No
set mwwindow2input *[Value]*	=hdmi1 =hdmi2 =displayport =opshdmi =opshdmidisplayport	mwwindow2input=*[Value]*	No
set mwwindow3input *[Value]*	=hdmi1 =hdmi2 =displayport =opshdmi =opshdmidisplayport	mwwindow3input=*[Value]*	No

Command	Possible values	Response	Standby mode
set mwwindow4input *[Value]*	=hdmi1 =hdmi2 =displayport =opshdmi =opshdmidisplayport	mwwindow4input=*[Value]*	No

System information

Use the following commands to identify system information settings.

Command	Response	Possible values	Standby mode
get autopoweroff	autopoweroff=*[Value]*	15–240	No
get fwverscr	fwverscr=*[Value]*	*[Scalar version firmware number]*	Yes
get fwvertouch	fwvertouch=*[Value]*	*[Touch controller firmware version number]*	Yes
get serialtouch	serialtouch=*[Value]*	*[Touch controller serial number]*	No
get opsinfo	opsinfo=*[Value]*	OPS NO OPS	No
get usb	usb=*[Value]*	hdmi1 hdmi2 displayport ops	No
get language[5]	language=*[Value]*	English Arabic Danish German Spanish Finnish French Hebrew Italian Dutch Norwegian Portuguese Russian Swedish Turkish Chinese_sim	No

[5]Languages for the on-screen display menu only

Command	Response	Possible values	Standby mode
get modelnum	modelnum=*[Value]*	*[Model number]*	No
get serialnum	serialnum=*[Value]*	*[Serial number]*	No
get proximityinstalled	proximityinstalled=*[Value]*	yes no	
get proximity	proximity=*[Value]*	on off	Yes
get proximityreenable	proximityreenable=*[Value]*	1–10	Yes
get proximitydetected	proximitydetected=*[Value]*	yes no	No
get monitorid	monitorid=*[Value]*	1–100	No
get powersave	powersave=*[Value]*	on off	No
get fbc	fbc=*[Value]*	on off	No
get waketotouch	waketotouch=*[Value]*	on off	No

Use the following commands to assign system information settings.

Command	Possible values	Response	Standby mode
set autopoweroff *[Value]*	+*[Incremental value]* -*[Incremental value]* =15–240	autopoweroff=*[Value]*	No
set factoryreset *[Value]*	=yes	factoryreset=*[Value]*	Yes

Command	Possible values	Response	Standby mode
set language *[Value]*[6]	=English =Arabic =Danish =German =Spanish =Finnish =French =Hebrew =Italian =Dutch =Norwegian =Portuguese =Russian =Swedish =Turkish =Chinese_sim	language=*[Value]*	No
set proximity *[Value]*	=on =off	proximity=*[Value]*	Yes
set proximityreenable *[Value]*	=1–10	proximityreenable=*[Value]*	Yes
set monitorid *[Value]*	+*[Incremental value]* -*[Incremental value]* =1–100	monitorid=*[Value]*	No
set lyncroom *[Value]*	=reset	lyncroom=*[Value]*	No
set touchdetected *[Value]*	=yes	touchdetected=*[Value]*	No
set powersave *[Value]*	=on =off	powersave=*[Value]*	No
set fbc *[Value]*	=on =off	fbc=*[Value]*	No
set waketotouch *[Value]*	=on =off	waketotouch=*[Value]*	No

[6]Languages for the on-screen display menu only

Appendix F

Installing the AM30 appliance antenna

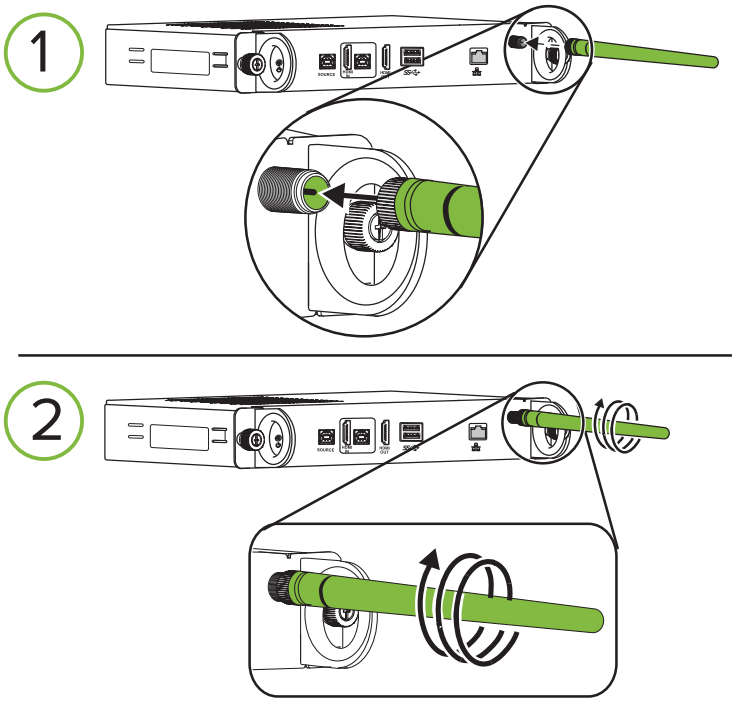

For more information, see the following installation guides:

- *SMART kapp iQ Pro 55 and 65 installation guide* (smarttech.com/kb/170810)
- *SMART kapp iQ Pro 65-V2 installation guide* (smarttech.com/kb/171107)
- *SMART kapp iQ Pro 75 installation guide* (smarttech.com/kb/170996)

Appendix G

Hardware environmental compliance

SMART Technologies supports global efforts to ensure that electronic equipment is manufactured, sold and disposed of in a safe and environmentally friendly manner.

Waste Electrical and Electronic Equipment (WEEE)

Electrical and electronic equipment contain substances that can be harmful to the environment and to human health. The crossed-out wheeled bin symbol indicates that products should be disposed of in the appropriate recycling stream and not as regular waste.

Batteries

The AM30 appliance contains a CR2032 battery. Recycle or dispose of batteries properly.

Perchlorate material

Battery contains perchlorate material. Special handling may apply. See dtsc.ca.gov/hazardouswaste/perchlorate.

More information

See smarttech.com/compliance for the materials table.

SMART TECHNOLOGIES

smarttech.com/support

smarttech.com/contactsupport

smarttech.com/kb/171000